MERCURY MARINER FORCE Outboards

parts bulletin

MERCURY Racing MERCURY Sport Jet QUICKSILVER Marine Parts & Accessories

No. 99-4

V-6 Outboard Rigging Hose Kit 32-825191A3

Rigging Hose Kit 32-825191A3 will only be available until October 1999. Order as required per application chart below after October 1999.

New kit 32-825191A4 will not contain the engine cowl fitting necessary for rigging hose installation. The fitting will be furnished with the engine beginning with model year 2000 production engines. An application chart is provided below for proper selection of the fitting kit, if required, for 1999 and prior engine installation.

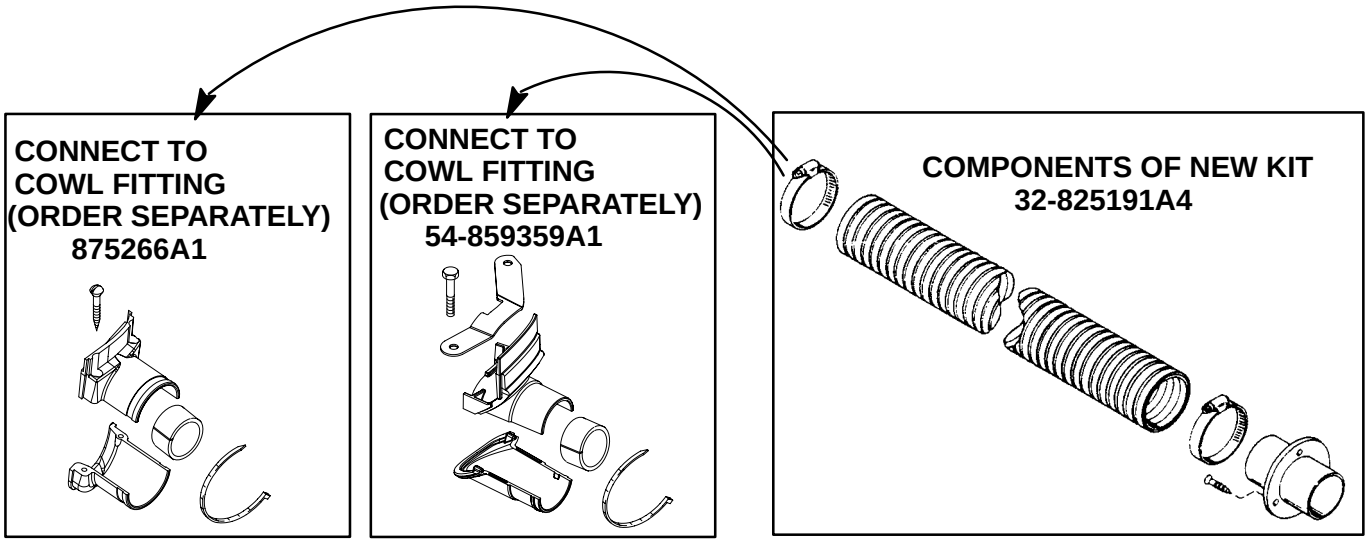

MODEL	SERIAL NUMBERS	YEARS	RIGGING HOSE KIT	FITTING KIT
2.0L V-6	0G303046 Thru 0G949999	1996 Thru 1999	32-825191A4	875266A1
2.0L V-6	0T065504 And Up	2000 And Up	32-825191A4	Incl. With Eng.
2.5L V-6	0G303046 Thru 0G949999	1996 Thru 1999	32-825191A4	875266A1
2.5L V-6	0T065504 And Up	2000 And Up	32-825191A4	Incl. With Eng.
2.5L OPTIMAX	0G590000 Thru 0G949999	1998 Thru 1999	32-825191A4	875266A1
2.5L OPTIMAX	0T065504 And Up	2000 And Up	32-825191A4	Incl. With Eng.
3.0L V-6	0D280813 Thru 0G949999	1994 Thru 1999	32-825191A4	875266A1
3.0L V-6	0T014000 And Up	2000 And Up	32-825191A4	Incl. With Eng.
3.0L DFI	0G386496 Thru 0G589999	1997	32-825191A4	875266A1
3.0L OPTIMAX	0G590000 Thru 0G949999	1998 Thru 1999	32-825191A4	54-859359A1
3.0L OPTIMAX	0T014000 And Up	2000 And Up	32-825191A4	Incl. With Eng.

Printed in U.S.A. - © 1999, Mercury Marine
provided by http://www.crowleymarine.com