MERCURY OUTBOARDS
MARINER OUTBOARDS
FORCE Outboards

parts bulletin

MERCURY HI-PERFORMANCE
SportJet BY MERCURY MARINE
QUICKSILVER MARINE PARTS AND ACCESSORIES

REPLACES No. 96-13 No. 97-6

CHRYSLER (1967 Thru 1983) & FORCE (1984 Thru 1998) PISTON/RING CHART

The Chrysler/Force Piston Ring Chart is attached for your information. The chart was designed to help you identify the many pistons available, and the proper bore size. Do not attempt to use this chart to fit pistons in blocks that no longer have pistons available. Piston diameter, pin size and/or weight or piston shape may differ.

The chart starts with the horsepower and year and model letter or serial number of the engine. If the year you are looking for is not listed, the parts are no longer available.

Next comes the Standard bore size. Fractions are listed where possible. The decimals given are actual or original bore sizes of older engines and must be used accordingly when boring for oversize pistons. Failure to use the decimal given will constitute a stuck piston. All oversize pistons will have an instruction sheet containing these decimals, as per the piston part number for the older pistons.

The chart also lists the number of total rings and how many tapered rings used on that piston. And finally, a listing of all pistons and rings by part number available for the appropriate bore.

Some piston kits have been made into assemblies for use on the older engines. These are marked accordingly.

provided by http://www.crowleymarine.com

CHRYSLER (1967 Thru 1983) & FORCE MODEL # (1984 Thru 1992) PISTON/RING CHART

	HP	YEAR MODEL #	STD BORE SIZE		# OF RINGS	# OF TAPER RINGS	STANDARD PISTON	STANDARD RING SET PER PISTON	.010OS PISTON	.010OS RING SET PER PISTON	.030OS PISTON	.030OS RING SET PER PISTON
			FRAC-TION	DEC-IMAL								
	20	1978-1982	2-13/16	2.8125	2	0	F458015-1	FA458260	FSA458015	FSA458260	818118A1	818119A1
	25	1973-1984	2-13/16	2.8125	2	0	F458015-1	FA458260	FSA458015	FSA458260	818118A1	818119A1
	30	1973-1975	2-13/16	2.8125	2	0	F458015-1	FA458260	FSA458015	FSA458260	818118A1	818119A1
	30	1979-1982		3.0008	2	1	834801	FA463260	834801A1	FSA463260	834801A2	818120A1
	35	1975/78-83/91		3.0008	2	0	834801	FA463260	834801A1	FSA463260	834801A2	818120A1
+	40	1992C	3-3/8	3.375	2	1	819005A11	820457A2	819005A12	820641A1	819005A13	818129A2
	45	1974-1984		3.1260	2	0	F486015	FA354260	FSA486015	FSA310260	818124A1	818113A1
+	50	1981-1987A	3-3/16	3.1888	2	1	817950A2	FA658260	817990A2	FSA658260	818114A2	818131A1
	50	1987B-1989A		3.1888	2	1	F658015	FA658260	FSA658015	FSA658260	818130A1	818131A1
	50	1989B-1992A	3-5/16	3.3125	2	1	F694015	817869A1	FSA694015	817869A2	818134A1	817869A3
+	50	1992C	3-3/8	3.375	2	1	834800A1	820457A2	819005A12	820641A1	834800A3	818129A2
+	55	1967-1976	3-3/16	3.1888	2	1	817950A2	FA658260	817990A2	FSA658260	818114A2	818131A1
+	55	1977-1978	3-3/8	3.375	2	1	‡ F474015-4	817820A1	‡ 820659A1	‡ 817992A1	‡ 820660A1	818122A1
	55	1979-1983	3-3/8	3.375	2	1	F522015	817820A1	‡ FSA522015	‡ 817992A1	818127A1	818122A1
+	60	1974-1976	3-3/8	3.375	2	1	‡ F474015-4	817820A1	‡ 820659A1	‡ 817992A1	‡ 820660A1	818122A1
	60	1984A-1985A	3-3/8	3.375	2	1	F522015	817820A1	‡ FSA522015	‡ 817992A1	818127A1	818122A1
+	65	1977-1978	3-3/8	3.375	2	1	‡ F474015-4	817820A1	‡ 820659A1	‡ 817992A1	‡ 820660A1	818122A1
	70	1971-1980		3.3138	2	0	F372015-3	FA335260	817988A2	FSA335260	818111A2	818110A1
+	70	1991B-1992C	3-3/8	3.375	2	1	819690A1	820457A2	819690A2	820641A1	819690A3	818129A2
	75	1974-1984		3.3138	2	0	F372015-3	FA335260	817988A2	FSA335260	818111A2	818110A1
	85	1969-1989B		3.3138	2	0	F372015-3	FA335260	817988A2	FSA335260	818111A2	818110A1
	85	1989C-1989H	3-5/16	3.3125	2	1	F691015	817869A1	FSA691015	817869A2	818133A1	817869A3
	85LD	1989A-1989C	3-5/16	3.3125	2	1	F694015	817869A1	FSA694015	817869A2	818134A1	817869A3

+ = Piston Kit Includes: Spacers, Bearing, Piston Pin, Rings And/Or Pin Retainers. **‡ = NO LONGER AVAILABLE**

provided by http://www.crowleymarine.com

CHRYSLER (1967 Thru 1983) & FORCE MODEL # (1984 Thru 1992) PISTON/RING CHART

	HP	YEAR MODEL #	STD BORE SIZE		# OF RINGS	# OF TAPER RINGS	STANDARD PISTON	STANDARD RING SET PER PISTON	.010OS PISTON	.010OS RING SET PER PISTON	.030OS PISTON	.030OS RING SET PER PISTON
			FRAC-TION	DEC-IMAL								
	90	1974-1977		3.3138	2	1	F440015-3	FA440260	817991A2	FSA440260	818116A2	818117A1
	90	1976-1984		3.3138	2	1	F372015-3	FA335260	817988A2	FSA335260	818111A2	818110A1
+	90	1990B-1992C	3-3/8	3.375	2	1	819690A1	820457A2	819690A2	820641A1	819690A3	818129A2
	90	1990A	3-5/16	3.3125	2	1	F691015	817869A1	FSA691015	817869A2	818133A1	817869A3
+	90LD	1990C-1992B	3-3/8	3.375	2	1	834800A1	820457A2	819005A12	820641A1	834800A3	818129A2
	100	1979-1984		3.3138	2	0	F372015-3	FA335260	817988A2	FSA335260	818111A2	818110A1
	105	1969/74-76/83		3.3138	2	0	F372015-3	FA335260	817988A2	FSA335260	818111A2	818110A1
	105	1975-1976		3.3138	2	1	834800A1	820457A2	819005A12	820641A1	834800A3	818129A2
	115	1977-1982	3-3/8	3.375	2	0	819409	FA475260	819409A3	FSA475260	819409A4	818123A1
	115	1983-1984		3.3138	2	0	F372015-3	FA335260	817988A2	FSA335260	818111A2	818110A1
	120	1970/74-76/77		3.3138	2	0	F372015-3	FA335260	817988A2	FSA335260	818111A2	818110A1
	120	1975-1976		3.3138	2	1	F440015-3	FA440260	817991A2	FSA440260	818116A2	818117A1
	120	1990A	3-5/16	3.3125	2	1	F691015	817869A1	FSA691015	817869A2	819133A1	817869A3
+	120	1990B-1992C	3-3/8	3.375	2	1	819690A1	820457A2	819690A2	820641A1	819690A3	818129A2
	120LD	1990A	3-5/16	3.3125	2	1	F694015	817869A1	FSA694015	817869A2	818134A1	817869A3
+	120LD	1990B-1992B	3-3/8	3.375	2	1	834800A1	820457A2	819005A12	820641A1	834800A3	818129A2
	125	1981-1988B		3.3138	2	0	F372015-3	FA335260	817988A2	FSA335260	818111A2	818110A1
	125	1988C		3.3138	2	0	F686015	FA335260	817988A2	FSA335260	818111A2	818110A1
	125	1989A-1989E	3-5/16	3.3125	2	1	F691015	817869A1	FSA691015	817869A2	818133A1	817869A3
	125LD	1989A-1989B	3-5/16	3.3125	2	1	F694015	817869A1	FSA694015	817869A2	818134A1	817869A3
	130	1972-1973		3.3138	2	1	F440015-3	FA440260	817991A2	FSA440260	818116A2	818117A1
	135	1969-1971		3.3138	2	0	F372015-3	FA335260	817988A2	FSA335260	818111A2	818110A1
	140	1979-1984		3.376	2	1	F528015	820457A2	819409A3	820641A1	834796A2	818129A2
	150	1972-1976		3.3138	2	1	F440015-3	FA440260	817991A2	FSA440260	818116A2	818117A1
	150	1989A-1990A	3-5/16	3.3125	2	1	F691015	817869A1	FSA691015	817869A2	818133A1	817869A3
+	150	1990B-1992C	3-3/8	3.375	2	1	819690A1	820457A2	819690A2	820641A1	819690A3	818129A3

+ = Piston Kit Includes: Spacers, Bearing, Piston Pin, Rings And/Or Pin Retainers. **= NO LONGER AVAILABLE**

provided by http://www.crowleymarine.com

FORCE SERIAL NUMBER (1992 Thru 1998) PISTON/RING CHART

	HP	YEAR SERIAL NUMBERS	STD BORE SIZE		# OF RINGS	# OF TAPER RINGS	STD PISTON	STD RING SET PER PISTON	.010OS PISTON	.010OS RING SET-PER PISTON	.015OS PISTON	.015OS RING SET-PER PISTON	.030OS PISTON	.030OS RING SET-PER PISTON
			FRACTION	DECIMAL										
+	40	1992-95 0E000001-0E138599	3-3/8	3.375	2	1	834800A1	820457A2	819005A12	820641A1			834800A3	818129A2
★	40	1996-97 0E138600-0E287999	3-3/8	3.375	2	1	828304A2	828565A1			828304A3	828565A2	828304A4	828565A3
★	40	1998 0E288000 & UP	3-3/8	3.375	2	1	828304A6	828564A1			828304A7	828564A2	828304A8	828564A3
+	50	1992-95 0E000001-0E138599	3-3/8	3.375	2	1	834800A1	820457A2	819005A12	820641A1			834800A3	818129A2
★	50	1996-97 0E138600-0E287999	3-3/8	3.375	2	1	828304A2	828565A1			828304A3	828565A2	828304A4	828565A3
★	50	1998 0E288000 & UP	3-3/8	3.375	2	1	828304A6	828564A1			828304A7	828564A2	828304A8	828564A3
+	70	1992-94 0E000001-0E093699	3-3/8	3.375	2	1	819690A1	820457A2	819690A2	820641A1			819690A3	818129A2
+	70	1995 0E093700-0E138599	3-3/8	3.375	2	1	819690A4	820457A2	819690A5	820641A1			819690A6	818129A2
★	75	1996-97 0E138600-0E287999	3-3/8	3.375	2	1	828304A2	828565A1			828304A3	828565A2	828304A4	828565A3
★	75	1998 0E288000 & UP	3-3/8	3.375	2	1	828304A6	828564A1			828304A7	828564A2	828304A8	828564A3
+	90	1992-94 0E000001-0E093699	3-3/8	3.375	2	1	819690A1	820457A2	819690A2	820641A1			819690A3	818129A2
+	90	1995 0E093700-0E138599	3-3/8	3.375	2	1	819690A4	820457A2	819690A5	820641A1			819690A6	818129A2
★	90	1996-97 0E138600-0E287999	3-3/8	3.375	2	1	828304A2	828565A1			828304A3	828565A2	828304A4	828565A3
★	90	1998 0E288000 & UP	3-3/8	3.375	2	1	828304A6	828564A1			828304A7	828564A2	828304A8	828564A3

+ = Piston Kit Includes: Spacers, Bearing, Piston Pin, Rings And/Or Pin Retainers.

★ = Piston Kit Includes: Piston Pin, Rings And Pin Retainers.

provided by http://www.crowleymarine.com

FORCE SERIAL NUMBER (1992 Thru 1998) PISTON/RING CHART

	HP	YEAR SERIAL NUMBERS	STD BORE SIZE		# OF RINGS	# OF TAPER RINGS	STD PISTON	STD RING SET PER PISTON	.010OS PISTON	.010OS RING SET-PER PISTON	.015OS PISTON	.015OS RING SET-PER PISTON	.030OS PISTON	.030OS RING SET-PER PISTON
			FRACTION	DECIMAL										
+	120	1992-94 0E000001-0E093699	3-3/8	3.375	2	1	819690A1	820457A2	819690A2	820641A1			819690A3	818129A2
+	120	1995 0E093700-0E138599	3-3/8	3.375	2	1	819690A4	820457A2	819690A5	820641A1			819690A6	818129A2
★	120	1996-97 0E138600-0E287999	3-3/8	3.375	2	1	828304A2	828565A1			828304A3	828565A2	828304A4	828565A3
★	120	1998 0E288000 & UP	3-3/8	3.375	2	1	828304A6	828564A1			828304A7	828564A2	828304A8	828564A3
+	150	1992-94 0E000001-0E093699	3-3/8	3.375	2	1	819690A1	820457A2	819690A2	820641A1			819690A3	818129A2

+ = Piston Kit Includes: Spacers, Bearing, Piston Pin, Rings And/Or Pin Retainers.

★ = Piston Kit Includes: Piston Pin, Rings And Pin Retainers.

provided by http://www.crowleymarine.com

Bottom/Top Guided Pistons

IMPORTANT: There are two types of piston/rod assemblies available:

Bottom Guided
(Centered In Bore By Crankshaft)
1995 Model Year & Below
Serial Number 0E138599 and Below

Bottom Guided Piston

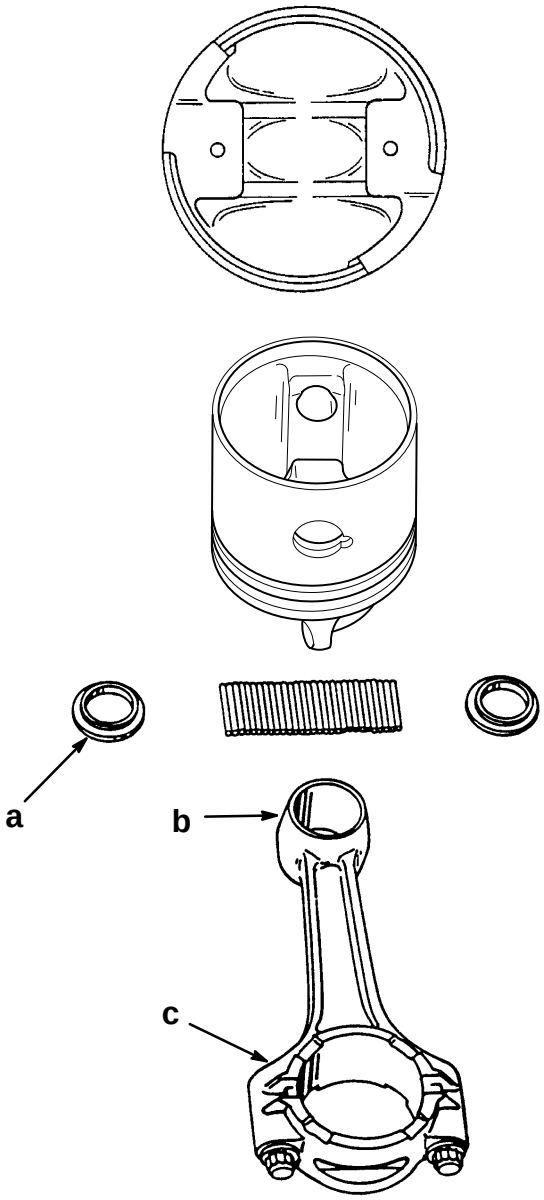

a - Ridged Washer
b - Smooth
c - Scalloped

Top Guided
(Centered In Bore By Piston)
1996 Model Year & Up
Serial Number 0E138600 and Above

Top Guided Piston

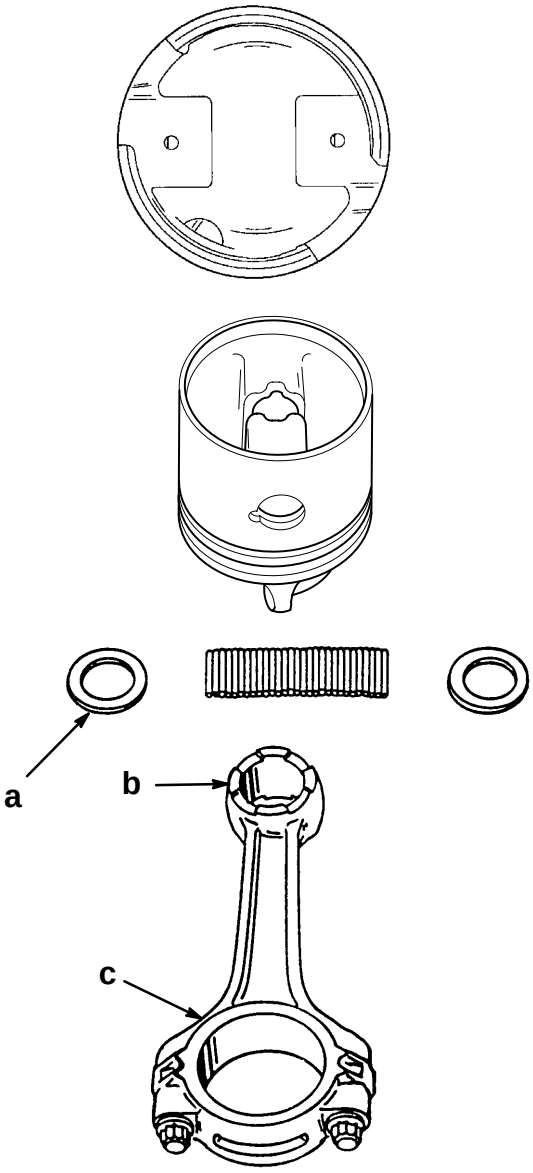

a - Flat Washer
b - Scalloped
c - Smooth

provided by http://www.crowleymarine.com