MERCURY MARINER

service bulletin

☐ WARRANTY INFORMATION ☑ SERVICE INFORMATION
☐ PARTS INFORMATION

Bulletin No. 2002-15
Jet Drive No. 2002-03
OEM No. 2002-05

Circulate to: ☐ Sales Manager ☐ Accounting ☑ Service Manager ☑ Technician ☑ Parts Manager

SmartCraft Communication Problem

Models Affected

Mercury/Mariner Outboards and Jet Drive engines connected to a SmartCraft Instrumentation system (SC 1000 System Tachometer, System Speedometer, System Monitor, or SC 5000 System View).

Situation

There have been some reported instances of SmartCraft Instrumentation Systems not being able to communicate with the engine or engines, even though they are correctly connected. The instrumentation will power up and display the various screens, but will not display any engine data. The cause has been traced to the blue & white leads within the blue data harness, or CAN line, used to connect the engine or engines to the instrumentation system. Only CAN lines with either 1 or 2 termination resistors in the harness have exhibited this problem.

The factory test procedure for these harnesses has been modified to detect this failure mode and all Mercury stock has been tested. Harnesses tested with the new procedure have a green date code label.

System Check

If a SmartCraft Instrumentation System exhibits this problem, check the CAN line wiring system as follows:

1. Verify that the CAN line wiring system includes exactly 2 termination resistors, either built into the CAN lines or plugged into a junction box, and that the termination resistors are at the furthest ends of the main data bus trunk (resistors are as far apart from each other as possible). Reconfigure the CAN line wiring system if necessary and retest the system before proceeding.

THE INFORMATION IN THIS DOCUMENT IS CONFIDENTIAL AND PROTECTED BY COPYRIGHT AND IS THE PROPERTY OF MERCURY MARINE.

This document is provided for the sole and exclusive use of the original recipient as prescribed by Mercury Marine and may not be distributed or copied, digitally or otherwise, without the prior written consent of Mercury Marine.

Printed in U.S.A. - © 2002, Mercury Marine
provided by http://www.crowleymarine.com

2. Determine if any CAN line being used has a built-in termination resistor. Harnesses with termination resistors have a yellow label around the black plastic conduit that reads “TERMINATION RESISTOR ON THIS END”. CAN lines with 2 built-in resistors will have a yellow label at both ends. CAN lines with built-in termination resistors will have one of the following part numbers: 84-879981-Axx, 84-879982-Axx.
3. If communication still cannot be established, inspect all CAN lines with built-in resistors as described below.

Inspection

Inspect both ends of any CAN line with built-in resistors, as follows:

1. Slide the convoluted tubing away from the retainer. This will allow the retainer to open so wire placement can be checked.

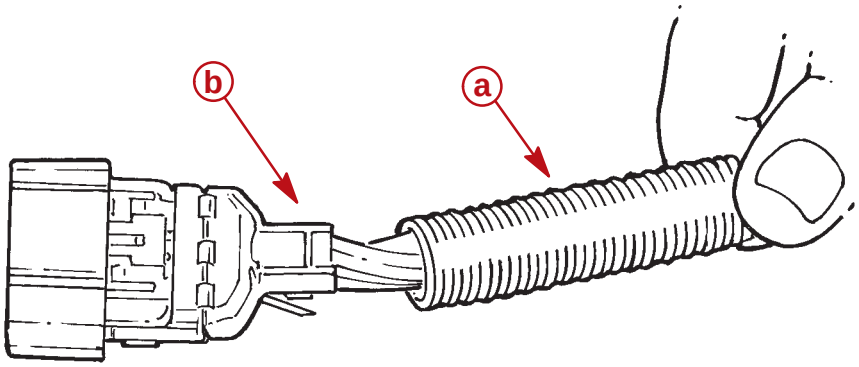

78616

a - Plastic Tubing
b - Retainer

2. Verify that the BLUE wire is in position K (corner position) and the WHITE wire is in position J.
   - If the BLUE wire is in position K and the WHITE wire is in position J, the wires were installed correctly. Close the retainer and push the convoluted tubing onto the retainer.

THE INFORMATION IN THIS DOCUMENT IS CONFIDENTIAL AND PROTECTED BY COPYRIGHT AND IS THE PROPERTY OF MERCURY MARINE.
This document is provided for the sole and exclusive use of the original recipient as prescribed by Mercury Marine and may not be distributed or copied, digitally or otherwise, without the prior written consent of Mercury Marine.

provided by http://www.crowleymarine.com

- If the BLUE wire is not in position K, then the BLUE and WHITE wires were installed incorrectly, and must be corrected. Refer to the “CORRECTION” section.

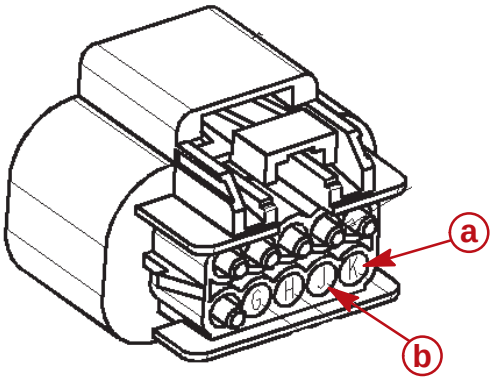

78664

a - Position K
b - Position J

Correction

Perform the following procedure only on harness ends found to be wired incorrectly.

1. Disconnect the retainer from the connector by using a small straight blade screwdriver to lift the retainer latches located on both sides of the retainer. Slide the retainer away from the connector.

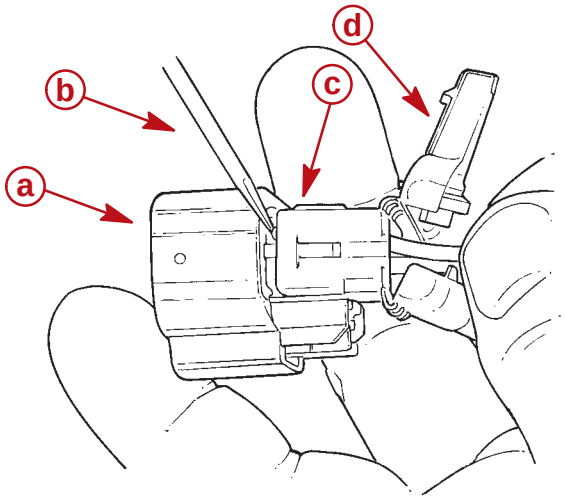

78617

a - Connector
b - Straight Blade Screwdriver
c - Retainer Latch
d - Retainer

THE INFORMATION IN THIS DOCUMENT IS CONFIDENTIAL AND PROTECTED BY COPYRIGHT AND IS THE PROPERTY OF MERCURY MARINE.
This document is provided for the sole and exclusive use of the original recipient as prescribed by Mercury Marine and may not be distributed or copied, digitally or otherwise, without the prior written consent of Mercury Marine.

provided by http://www.crowleymarine.com

2. Remove the PURPLE terminal cap located on the front side of the connector by using a small straight blade screwdriver to lift the cap out of the connector.

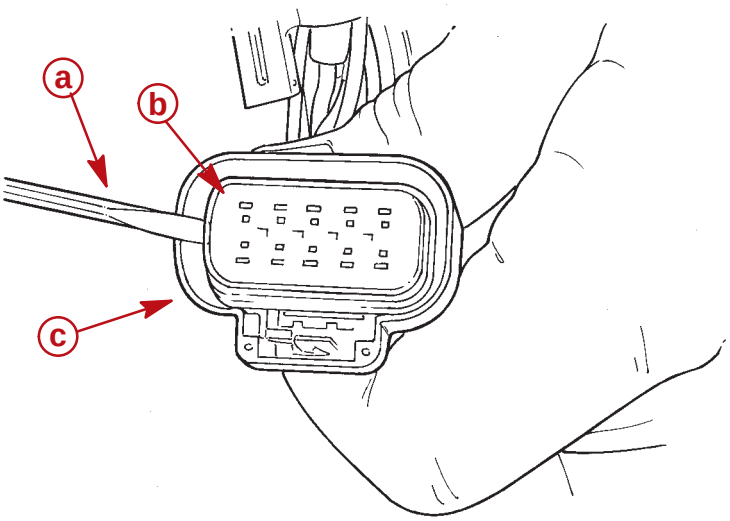

78621

a - Straight Blade Screwdriver
b - Purple Terminal Cap
c - Connector

3. Remove the BLUE and WHITE wires from the connector. For each wire, use a straight blade screwdriver to push and hold the retaining clip away from the wire terminal and pull the wire out of the back of the connector.

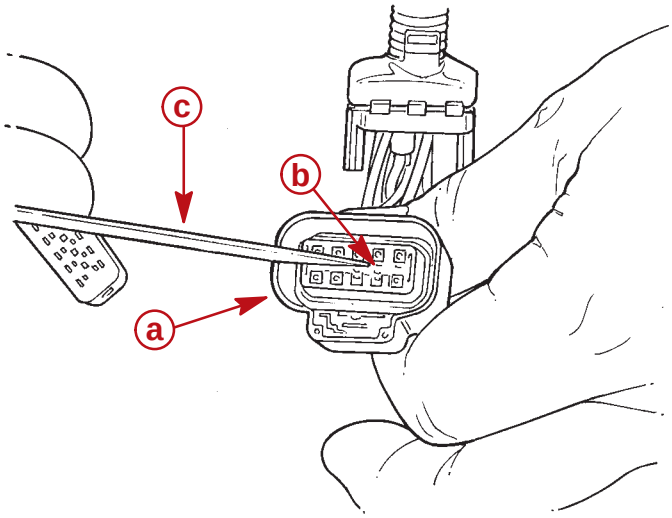

78620

a - Connector
b - Retaining Clip
c - Straight Blade Screwdriver

THE INFORMATION IN THIS DOCUMENT IS CONFIDENTIAL AND PROTECTED BY COPYRIGHT AND IS THE PROPERTY OF MERCURY MARINE.
This document is provided for the sole and exclusive use of the original recipient as prescribed by Mercury Marine and may not be distributed or copied, digitally or otherwise, without the prior written consent of Mercury Marine.

provided by http://www.crowleymarine.com

4. Insert the BLUE wire in position K and the WHITE wire in position J. Push each wire terminal into the connector until it locks in place and cannot be pulled out.

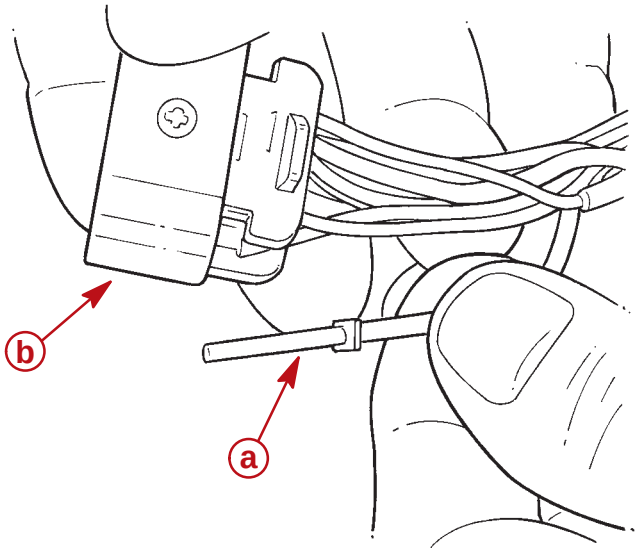

78619

a - Wire
b - Connector

5. Install the PURPLE terminal cap.
6. Reassemble the retainer to the connector. Close the retainer and push the tubing onto the retainer.

Warranty

Mercury Marine will credit the dealer for the cost of parts and labor for three years from the issuance of this bulletin. Please note the month and year located at the lower left corner of the front page of this document.

Submit a warranty claim through your normal warranty-processing channel. Submit a claim only if the CAN line is found to be wired incorrectly. Include on the claim form the date code from the label on the CAN line.

- Warranty Code and Labor - EXCP 0.5 Hours.
- Part Code - 936
- Failure Code - 03

THE INFORMATION IN THIS DOCUMENT IS CONFIDENTIAL AND PROTECTED BY COPYRIGHT AND IS THE PROPERTY OF MERCURY MARINE.
This document is provided for the sole and exclusive use of the original recipient as prescribed by Mercury Marine and may not be distributed or copied, digitally or otherwise, without the prior written consent of Mercury Marine.

provided by http://www.crowleymarine.com