MERCURY MARINER

service bulletin

☐ WARRANTY INFORMATION ☑ SERVICE INFORMATION
☐ PARTS INFORMATION

Bulletin No. 2002-09
Jet Drive No. 2002-02

Circulate to: ☑ Sales Manager ☐ Accounting ☑ Service Manager ☑ Technician ☑ Parts Manager

Corrosion Prevention and Maintenance

Models Affected

ALL MERCRUISER, OUTBOARD AND JET DRIVE PRODUCTS

Marine Corrosion

The prevention of marine corrosion can be a challenge for boat owners. However, corrosion damage is almost always controllable, it just requires knowledge of what causes corrosion and the proper maintenance steps that must be taken to protect the product.

Over the years, Mercury has published several guides and manuals to educate dealers and boat owners about corrosion and what steps should be taken to prevent corrosion from causing significant and costly damage to submerged drive components. All Mercury dealers should be familiar with these publications, understand the primary causes of corrosion and know what to do to prevent marine corrosion in all types of boating environments.

A good example is the Marine Corrosion Protection Guide. This guide is an excellent publication that presents the information in an easy-to-follow format. The guide details the following in a very simplified way:

- What is Marine Corrosion?
- Corrosion Protection
- Testing and Troubleshooting
- Preventative Maintenance
- Protection Products

These guides are available at no charge. The publication numbers are: 90-881813 01 (Mercury) and 90-809844 01 (Quicksilver).

THE INFORMATION IN THIS DOCUMENT IS CONFIDENTIAL AND PROTECTED BY COPYRIGHT AND IS THE PROPERTY OF MERCURY MARINE.

This document is provided for the sole and exclusive use of the original recipient as prescribed by Mercury Marine and may not be distributed or copied, digitally or otherwise, without the prior written consent of Mercury Marine.

Printed in U.S.A. - © 2002, Mercury Marine
provided by http://www.crowleymarine.com

Another good source of information is from the Mercury Technical Service Education video series. The video title is Marine Corrosion and presents much of the information found in the Marine Corrosion Guide. The video number is: 90-823732 7.

During the pre-delivery inspection process with the boat owner(s), review the proper maintenance activities that are needed to ensure that the boat and drive unit are properly protected from corrosion. Also, it is recommended to review the contents of the Mercury Corrosion Protection Guide with them and give them a copy to take home.

If a boat owner has a complaint about corrosion damage, please perform the necessary inspection and testing procedures to identify the source of corrosion (see enclosed Corrosion Test Data Sheet that can assist you in this effort). As always, our dealer technical support team is available to provide technical assistance in the diagnosis and correction of corrosion.

What is Corrosion?

Metal parts under water are primarily subjected to two basic types of corrosion: Galvanic Corrosion and Stray Current Corrosion.

1. **Galvanic Corrosion:** Galvanic corrosion is an electrochemical reaction between two or more different or dissimilar metals. The metals must be different because one must be more chemically active or less stable than the other(s) for a reaction to take place. In galvanic corrosion, an electrical exchange occurs between the dissimilar metals. All metals have an electrical potential because all atoms that comprise the metals have electrons (electricity).

   Galvanic corrosion of the more chemically active metal can occur whenever two or more dissimilar metals that are “grounded” (connected either by actually touching each other, or through a wire or metal part) are immersed in a conductive solution (any liquid that can transfer electricity). Salt water, fresh water with a high mineral content, and polluted fresh water (brackish) are very conductive and conductivity goes up with water temperature. This is one reason why boats in Florida experience more corrosion than boats in Maine.

   The simplest example of galvanic corrosion, and the most applicable, is an aluminum lower unit with a stainless steel propeller. The aluminum is the more chemically active metal (the “anode”), and the stainless steel is the less chemically active metal (the “cathode”).

2. **Stray Current Corrosion:** Stray current corrosion is any electrical current flowing along or through a metal conductor and leaving the metal for a water path to ground. This will cause ionization of the metal and an area of rapid corrosion. Stray current corrosion is commonly a result of connecting a boat to shore power. This is regular galvanic corrosion greatly accelerated by the addition of electricity.

THE INFORMATION IN THIS DOCUMENT IS CONFIDENTIAL AND PROTECTED BY COPYRIGHT AND IS THE PROPERTY OF MERCURY MARINE.

This document is provided for the sole and exclusive use of the original recipient as prescribed by Mercury Marine and may not be distributed or copied, digitally or otherwise, without the prior written consent of Mercury Marine.

provided by http://www.crowleymarine.com

Corrosion Protection

1. **Sacrificial Anodes:** The anodes are available in both aluminum (for use in fresh, brackish and saltwater) and magnesium (for use in fresh water only).
2. **MerCathode:** The MerCathode system is standard on all Bravo products and is available as an accessory for Alpha products.
3. **Transom Mounted Anode:** This anode is connected to the MerCathode for additional anodic protection.
4. **Transom Mounted MerCathode Kit:** For use with outboards, Jet Drives and non-current MerCruiser product where the transom gimbal housing has no access for mounting a MerCathode system.
5. **Defender Anode:** This anode connects to either the negative terminal on the battery or a good engine ground, for additional protection while the boat is moored.
6. **Galvanic Isolator:** This device is connected in series into the boat's green safety grounding lead ahead of all grounding connections on the boat. This device functions as a filter, blocking the flow of destructive low voltage galvanic (DC) currents, but still maintaining the integrity of the safety grounding circuit.

Test Procedures

Tools required

1. Digital Multi-meter Tachometer – DMT 2000A (91-854009A 3) or equivalent.
2. Quicksilver Reference Electrode tester (91-76675T1)

The first five things to check before performing any test

1. If equipped with shore power, unplug the shore power.
2. Check that the fuse is OK in the positive (+) battery lead.
3. Check the battery voltage. The voltage must be 12.6 volts or higher.
4. Check to ensure that all connections at the controller (MerCathode) and at the battery are tight.
5. Check for proper ground between the drive and the controller (MerCathode),

THE INFORMATION IN THIS DOCUMENT IS CONFIDENTIAL AND PROTECTED BY COPYRIGHT AND IS THE PROPERTY OF MERCURY MARINE.

This document is provided for the sole and exclusive use of the original recipient as prescribed by Mercury Marine and may not be distributed or copied, digitally or otherwise, without the prior written consent of Mercury Marine.

provided by http://www.crowleymarine.com

Before performing corrosion testing

The boat should be moored without being operated for at least eight hours before performing the test. This is necessary to allow the MerCathode System and/or the sacrificial anodes to polarize the water molecules in direct contact with the drive. Be careful not to rock the boat excessively while performing the test as this will alter the test readings.

Checking for conductivity

1. The boat must be moored in the water when performing this test (see “Before performing corrosion testing” section).
2. Set the digital multi-meter on DC millivolt (mV) position.
3. Connect the negative (–) meter lead (black) to the multi-meter. Connect the other end of the test lead to the negative (–) battery terminal.
4. Connect the positive (+) meter lead (red) to the multi-meter. Suspend the other end of the lead in the water within 15cm (6” in.) of the aft end of the drive unit or the propeller. Do not allow it to make contact with either component for this test. The reading should be above 3 millivolts. If it is below 3 millivolts, recheck the ground connections.

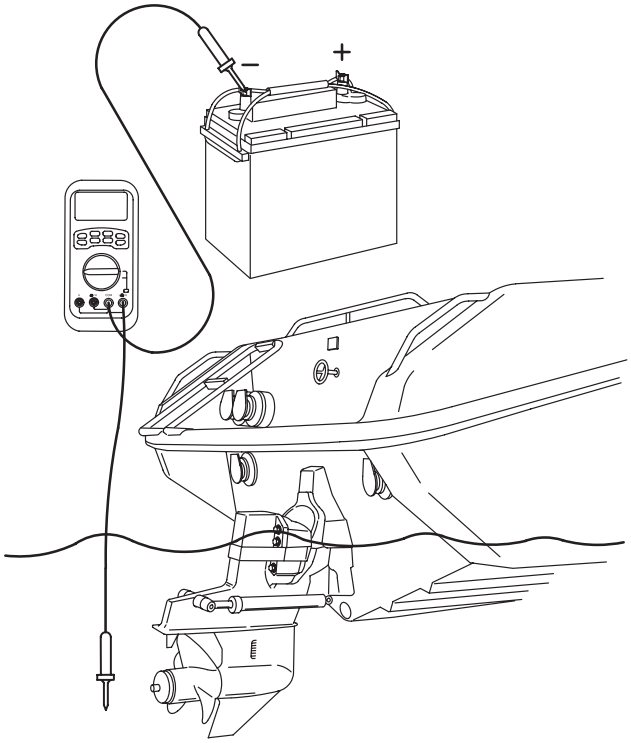

00161

5. Next, connect the end of the positive meter lead to each metallic component on the drive and transom, making sure that there is good electrical contact to each surface. The reading should drop below 2 millivolts.
6. Any reading higher than 2 millivolts indicates an improper grounding circuit. Correct as required. Retest to verify repair(s).

THE INFORMATION IN THIS DOCUMENT IS CONFIDENTIAL AND PROTECTED BY COPYRIGHT AND IS THE PROPERTY OF MERCURY MARINE.

This document is provided for the sole and exclusive use of the original recipient as prescribed by Mercury Marine and may not be distributed or copied, digitally or otherwise, without the prior written consent of Mercury Marine.

provided by http://www.crowleymarine.com

Measuring Hull Potential

1. The boat must be moored in the water when performing this test (see “Before performing corrosion testing” section).
2. Set the digital multi-meter on DC millivolt (mV) position.
3. Connect the negative (–) meter lead (black) to the multi-meter. Connect the other end to the negative (–) battery terminal, the engine ground stud on the flywheel housing (MerCruiser) or the engine ground where the negative battery cable is connected to the powerhead (outboard and Jet Drive).
4. Connect the positive (+) meter lead (red) to the multi-meter. Connect the other end to the Quicksilver reference electrode. The reference electrode is a silver wire with a silver chloride coating. Suspend the end of the reference electrode in the water within 15cm (6” in.) of the aft end of the drive unit behind the propeller. Do not allow the electrode to make contact with either the drive unit or the propeller.

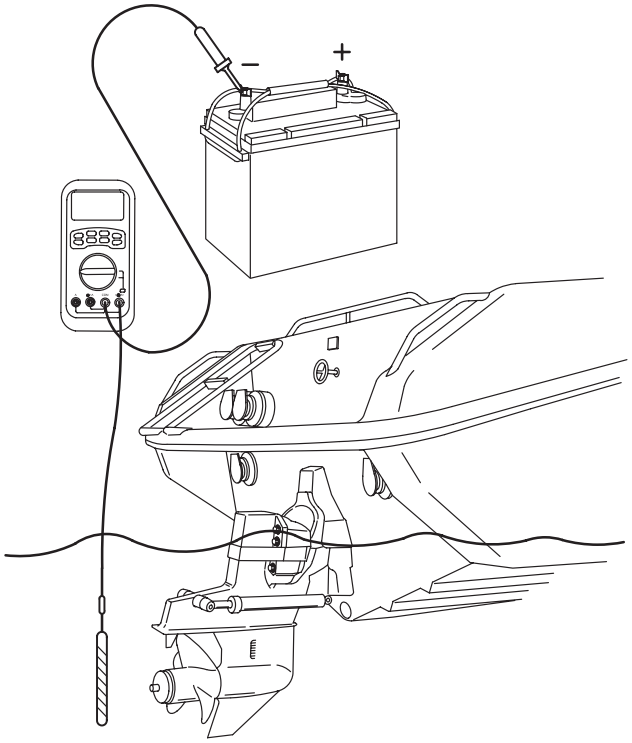

00160

5. Record hull potential readings at this time.

THE INFORMATION IN THIS DOCUMENT IS CONFIDENTIAL AND PROTECTED BY COPYRIGHT AND IS THE PROPERTY OF MERCURY MARINE.

This document is provided for the sole and exclusive use of the original recipient as prescribed by Mercury Marine and may not be distributed or copied, digitally or otherwise, without the prior written consent of Mercury Marine.

provided by http://www.crowleymarine.com

Hull potential readings

	Alpha/Outboard/ Jet Drive	Bravo I, II	Bravo III
Fresh Water Conditions			
A hull potential reading between 750 to 1050 millivolts	Standard aluminum anodes are sufficient	The factory installed MerCathode system is normally sufficient	The factory installed MerCathode system is normally sufficient
A hull potential below 750 millivolts and heavily silted water	Additional anodes and / or a MerCathode system should be recommended	The factory installed MerCathode system plus additional anodes and / or two transom mounted button anodes may be required	The factory installed MerCathode system plus additional anodes and / or two transom mounted button anodes may be required
A hull potential above 1050 millivolts	Check for stray current and / or faulty MerCathode	Check for stray current and / or faulty MerCathode	Check for stray current and / or faulty MerCathode

	Alpha/Outboard/ Jet Drive	Bravo I, II	Bravo III
Salt Water/ Brackish Water Conditions			
A hull potential reading between 850 to 1100 millivolts	Standard aluminum anodes are sufficient	The factory installed MerCathode system is normally sufficient	The factory installed MerCathode system is normally sufficient
A hull potential reading below 850 millivolts	Additional anodes should be recommended	The factory installed MerCathode system plus additional anodes will be required	The factory installed MerCathode system and two transom mounted anodes will be required
A hull potential above 1100 millivolts	Check for stray current and / or faulty MerCathode	Check for stray current and / or faulty MerCathode	Check for stray current and / or faulty MerCathode

THE INFORMATION IN THIS DOCUMENT IS CONFIDENTIAL AND PROTECTED BY COPYRIGHT AND IS THE PROPERTY OF MERCURY MARINE.

This document is provided for the sole and exclusive use of the original recipient as prescribed by Mercury Marine and may not be distributed or copied, digitally or otherwise, without the prior written consent of Mercury Marine.

provided by http://www.crowleymarine.com

Symptoms of hull potential readings too low

1. Too much cathode such as stainless steel.
2. Loss of continuity between the drive components and ground.
3. Sacrificial anodes more than 50% consumed or painted or inactive.
4. MerCathode reference wire or anode plate painted over.
5. No power to the MerCathode controller.
   a. Failed fuse.
   b. Shut off at the battery switch.
   c. Wired to the wrong side of the switch.
6. Poor connection between the reference electrode (brown) lead or the anode (orange) lead at the MerCathode controller.
7. Faulty MerCathode reference electrode.
   a. Test by disconnecting the reference electrode (brown) lead from the “R” terminal on the controller. Then connect the brown lead to the positive (**+**) lead from the digital multi-meter.
   b. Set the digital multi-meter on the DC millivolt (mV) position.
   c. Connect the negative (**–**) lead of the multi-meter to either the negative battery lead or the engine grounding stud at the flywheel housing.
   d. Note the meter reading, then repeat the test with the Quicksilver reference electrode (91-76675T1) held behind the drive.
   e. The same reading should be obtained with both tests. If not, replace the unit on the transom gimbal housing (MerCruiser) or on the transom (outboard and Jet Drive).
8. Faulty MerCathode controller.
   a. With the anode and the reference electrode leads connected to the controller, connect a jumper wire between the “R” terminal and the negative (**–**) terminal on the controller.
   b. Set the digital multi-meter on the DC volt (V) position.
   c. Connect the red positive (**+**) lead of the multi-meter to the “A” terminal on the controller and connect the black negative (**–**) lead from the multi-meter to the negative terminal on the controller.
   d. The readings should be:
      - Fresh water areas = 11.5 volts minimum.
      - Salt/brackish water areas = 3.55 volts minimum.

      If the readings are low, replace the controller.

THE INFORMATION IN THIS DOCUMENT IS CONFIDENTIAL AND PROTECTED BY COPYRIGHT AND IS THE PROPERTY OF MERCURY MARINE.
This document is provided for the sole and exclusive use of the original recipient as prescribed by Mercury Marine and may not be distributed or copied, digitally or otherwise, without the prior written consent of Mercury Marine.

provided by http://www.crowleymarine.com

Symptoms of hull potential reading too high

1. Paint blistering and falling off.
2. Pitting of aluminum on the drive.
   a. Excessive voltage causes hydrogen to be formed at the surface of the metal “peeling” the paint off.
   b. This also creates an alkaline condition at the surface that dissolves the aluminum.
3. Stray Current Corrosion.
   a. Any electrical current flowing along or through a metal conductor and leaves the metal for a water path to ground will cause ionization of the metal and an area of rapid corrosion.
   b. If the source is internal, observe the readings while disconnecting the electrical components (one at a time) until the high reading is eliminated.
   c. That is the immediate source of the stray current. If external, install a Galvanic Isolator.
4. Poor connection between MerCathode reference electrode brown lead and the “R” terminal on the controller.
   a. Clean and/or tighten the connections, repair wiring as required.
   b. Clean off any and all salt deposits.
5. Faulty MerCathode reference electrode.
   a. Test by disconnecting the reference electrode brown lead from the “R” terminal on the controller. Set the digital multi-meter on the DC millivolt (mV) position. Then connect the brown lead to the positive (**+**) lead from the digital multi-meter. Connect the negative (**–**) lead of the multi-meter to either the negative battery terminal, the engine ground stud at the flywheel housing terminal (MerCruiser) or the engine ground where the negative battery cable is connected to the powerhead (outboard and Jet Drive). Note meter reading. Then repeat the test with the Quicksilver Reference Electrode (91-76675T1) held 15cm (6” in) behind the propeller. The same reading should be obtained with both tests. If not, replace the unit on the transom gimbal housing (MerCruiser) or on the transom (outboard and Jet Drive).
6. Faulty MerCathode Controller.
   a. Check output of the controller.

THE INFORMATION IN THIS DOCUMENT IS CONFIDENTIAL AND PROTECTED BY COPYRIGHT AND IS THE PROPERTY OF MERCURY MARINE.
This document is provided for the sole and exclusive use of the original recipient as prescribed by Mercury Marine and may not be distributed or copied, digitally or otherwise, without the prior written consent of Mercury Marine.

provided by http://www.crowleymarine.com

b. If the hull potential indicates overprotection, remove the reference electrode lead from the controller. If the controller is “off” (no impressed current called for), the voltage between the negative (black) and the anode should be less than one volt. With the reference electrode disconnected, check the amperage between the negative on the controller and the anode terminal. It should be less than one milliamp.

c. Measure the output of the MerCathode. Disconnect the anode lead from the controller. Set the digital multi-meter to the milliamp (mA) position and connect between the anode lead and the anode terminal. If the MerCathode is fully on, the output should be about 200 milliamps in salt water/brackish water or 20-25 milliamps in fresh water. Disconnect the reference electrode lead, the output should drop to zero. If there is any current output with the reference disconnected, the controller is faulty and should be replaced.

Out of Water Resistance Check

A digital multi-meter such as the Mercury DMT 2000A (91-854009A 3) or equivalent must be used for this test.

1. Select the ohm (Ω) position on the meter.
2. Connect the black meter lead from the (COM) port on the meter to the drive unit trim tab or the drive shaft housing cavitation plate anode.
3. Connect the red meter lead into the ohm (Ω) position on the meter.
4. Connect the other end of the red lead to an exposed area of any component of the power package to be tested. The reading should be no higher than 150 milliohms or 0.15 ohms between all components.
5. Connect the black meter lead to the battery negative terminal or a good ground on the engine such as the ground stud at the flywheel housing (MerCruiser) or the engine ground where the negative battery cable is connected to the powerhead (outboard and Jet Drive).
6. Connect the red meter lead to the ground strap on the inner transom plate. Reading should be no higher than 150 milliohms or 0.15 ohms.

NOTE: *If a higher reading than specified exists, poor continuity is indicated. The high resistance area must be located and its cause must be corrected.*

THE INFORMATION IN THIS DOCUMENT IS CONFIDENTIAL AND PROTECTED BY COPYRIGHT AND IS THE PROPERTY OF MERCURY MARINE.

This document is provided for the sole and exclusive use of the original recipient as prescribed by Mercury Marine and may not be distributed or copied, digitally or otherwise, without the prior written consent of Mercury Marine.

provided by http://www.crowleymarine.com

Galvanic Isolator Testing Procedure

A digital multi-meter such as the Mercury DMT 2000A (91-854009A 3) or equivalent must be used for this test.

1. Connect the black test lead to the Volt/Ohm/Hz (V/Ω/Hz) connection on the meter per the instruction booklet from the meter being used. Connect the leads between the ends of the green leads on the Galvanic Isolator. The meter reading should start out at the low end of the scale and gradually build up until the meter reaches a point to where it levels out depending on the size of the diode being used.
2. Next, reverse the leads from end to end. The reading should again start out low and reach a point to where it levels out. The two readings should be about the same.
3. If the readings are not close to the same (one reading is high when the leads are switched the reading stays at “0”), the diode is bad and the Galvanic Isolator requires replacement.
4. If the reading goes to infinity, the diode is shorted and the Galvanic Isolator requires replacement.

New Anode kits for current MerCruiser stern drives

The following kits include all anodes required to replace every anode on the Alpha and Bravo drives and transoms.

888756A 1	Alpha Aluminum Anode Kit
888755A 1	Alpha Magnesium Anode Kit
888758A 1	Bravo I Aluminum Anode Kit
888757A 1	Bravo I Magnesium Anode Kit
888761A 1	Bravo II/III Aluminum Anode Kit
888760A 1	Bravo II/III Magnesium Anode Kit

THE INFORMATION IN THIS DOCUMENT IS CONFIDENTIAL AND PROTECTED BY COPYRIGHT AND IS THE PROPERTY OF MERCURY MARINE.

This document is provided for the sole and exclusive use of the original recipient as prescribed by Mercury Marine and may not be distributed or copied, digitally or otherwise, without the prior written consent of Mercury Marine.

provided by http://www.crowleymarine.com

Corrosion Test Data Sheet

Initial Test Data Form

Date of Test : Day Month Year

Dealer Name _____ Dealer Number _____

Customer Name _____

Address _____

_____

Telephone Number (____)_____

Address where the boat is Moored _____

_____

Boat Manufacturer _____ Boat Model _____

Type of Installation: Single ( ) Dual ( ) Triple ( )

Engine Package Model _____

Serial Numbers: Starboard Engine _____

Starboard Transom _____

Starboard Drive _____

Center Engine _____

Center Transom _____

Center Drive _____

Port Engine _____

Port Transom _____

Port Drive _____

THE INFORMATION IN THIS DOCUMENT IS CONFIDENTIAL AND PROTECTED BY COPYRIGHT AND IS THE PROPERTY OF MERCURY MARINE.

This document is provided for the sole and exclusive use of the original recipient as prescribed by Mercury Marine and may not be distributed or copied, digitally or otherwise, without the prior written consent of Mercury Marine.

provided by http://www.crowleymarine.com

MerCathode System Type: Boat Transom Mounted ( ) or Gimbal Housing Mounted ( )

Water Type: Fresh ( ) Brackish ( ) Salt ( )

Water Velocity: (speed of movement) (____ mph)

Propeller Type: Aluminum ( ) Stainless ( )

Boat Equipped with Trim Tabs: Yes ( ) No ( )

If so what type: Aluminum ( ) Stainless Steel ( )

If Yes, Are the Trim Tabs Grounded to the Power Package: Yes ( ) No ( )

Does the boat have an attached swim platform with mounting hardware: Yes ( ) No ( )

If so what type of Mounting Hardware is used: Aluminum ( ) Stainless Steel ( )

If yes is the Swim Platform grounded to the Power Package: Yes ( ) No ( )

Is there a Battery Switch in use: Yes ( ) No ( )

If yes, can the switch turn off the power to the MerCathode Controller: Yes ( ) No ( )

Is there Shore Power to the Boat: Yes ( ) No ( )

If yes, does the boat have a Shore Power Isolator or an Isolation Transformer installed: Yes ( ) No ( )

If yes, what Brand: _____

Does the Hull Potential Voltage Rise with the shore power unplugged: Yes ( ) No ( )

Has an Anti-Fouling Paint been applied to: Drive: Yes ( ) No ( ) Transom: Yes ( ) No ( )

If yes, list the type of Anti-Fouling Fouling Paint used: _____

If applied to the boat hull, is there 1” to 1 1/2” of unpainted Boat transom around the Gimbal Housing:
Yes ( ) No ( )

Date of Test: _____

Technical Service Representatives Name: _____

Test Results for the Following:

Battery Voltage Test: _____ Volts

Anode Output Test: _____ Milliamps

Hull Potential Voltage Test: _____ Volts

THE INFORMATION IN THIS DOCUMENT IS CONFIDENTIAL AND PROTECTED BY COPYRIGHT AND IS THE PROPERTY OF MERCURY MARINE.

This document is provided for the sole and exclusive use of the original recipient as prescribed by Mercury Marine and may not be distributed or copied, digitally or otherwise, without the prior written consent of Mercury Marine.

provided by http://www.crowleymarine.com

Continuity Test: Millivolt Reading, the boat must be in the water for this test.

1. Set the Digital Multimeter on the 0-2 volt (0-2000 millivolts) scale.
2. Connect the negative (black) meter lead to the negative (–) battery terminal.
3. Suspend the end of the positive (red) meter lead in the Water within (152 mm) 6 in. of the drive unit. Do not allow it to make contact with the drive unit. The reading should be above 3 millivolts.
4. Connect the end of the positive meter lead to each metallic component on the stern drive unit, making sure that there is good contact to each metallic surface. The reading should drop below 2 millivolts.
5. A reading higher than 2 millivolts indicates an improper grounding.

If the above readings were higher than 2 millivolts the following should be performed: Milliohms Reading set the Digital Multimeter on the low ohm range (2 ohm) scale or (X1) on the meter.

Gear housing_____Milliohms Drive Shaft Housing_____Milliohms

Bell Housing_____Milliohms Gimbal Ring_____Milliohms

Trim Cylinders_____Milliohms Propeller_____Milliohms

If the Continuity reading was too high, What was the cause for the high reading?

_____

_____

_____

_____

What was the: Water Temperature_____Degrees

Air Temperature_____Degrees

Type of Dock Construction: Metal Yes ( ) No ( ) Wood Yes ( ) No ( )

Shore Line Type:_____

Docking Area: 1. Number of Boats_____

2. Type of Boats_____

3. Is Shore Power Present on other Boats? Yes ( ) No ( )

THE INFORMATION IN THIS DOCUMENT IS CONFIDENTIAL AND PROTECTED BY COPYRIGHT AND IS THE PROPERTY OF MERCURY MARINE.

This document is provided for the sole and exclusive use of the original recipient as prescribed by Mercury Marine and may not be distributed or copied, digitally or otherwise, without the prior written consent of Mercury Marine.

provided by http://www.crowleymarine.com

Has a Stray Current Check been done? Yes ( ) No ( )

If so, what was the reading taken: _____

Have pictures been taken? Yes ( ) No ( )

The Locality of the Corrosion: ( ) All under water power package components.

( ) Gear Housing ( ) Drive Shaft Housing ( ) Bell Housing

( ) Gimbal Ring ( ) Gimbal Housing ( ) Trim Cylinders

( ) Propeller ( ) All Anodes ( ) Other

If the unit has Paint Blistering what is the Locality: ( ) All under water power package components

( ) Gear Housing ( ) Drive Shaft Housing ( ) Bell Housing

( ) Gimbal Ring ( ) Gimbal Housing ( ) Trim Cylinders

( ) Propeller ( ) All Anodes ( ) Other

What is the severity of the Paint Blistering: ( ) None ( ) Slight ( ) Moderate ( ) Severe

What is the severity of the corrosion: ( ) None ( ) Slight ( ) Moderate ( ) Severe

What is the condition of the Boat Hull?

_____

_____

_____

_____

_____

Inspection performed by: _____

THE INFORMATION IN THIS DOCUMENT IS CONFIDENTIAL AND PROTECTED BY COPYRIGHT AND IS THE PROPERTY OF MERCURY MARINE.

This document is provided for the sole and exclusive use of the original recipient as prescribed by Mercury Marine and may not be distributed or copied, digitally or otherwise, without the prior written consent of Mercury Marine.

provided by http://www.crowleymarine.com