MERCURY
MARINER
MERCURY Jet Drive
FORCE Outboards

service information

☐ ADVISORY
☑ BULLETIN

No. 2001-10
(Mercury Jet Drives No. 2001-02)

Circulate to: ☑ Sales Manager ☑ Accounting ☑ Service Manager ☑ Technician ☑ Parts Manager

Official Recall Notification Federal Boat Safety Act Fuel Pump Fuse & Filter - 175/210/240 HP Jet Drive

Models Affected:

GROUP 1

210/240HP Jet Drives – 2000/2001 Model Year
Serial numbers : 0E373939 through 0E393940

GROUP 2

175/210HP Jet Drives – 2001 Model Year
Serial numbers : 0E393941 through 0E397964

GROUP 3

240HP Jet Drives – 2001 Model Year
Serial numbers : 0E393941 through 0E397665

Engines listed in Group 1 may have an incorrect fuse (20A instead of a 3A) installed for the fuel pump.

Engines listed in Group 2 and Group 3 may have an incorrect fuse (20A instead of a 3A) and may also have a loose connection between the fuel filter and fuel pump.

The conditions described above, if they exist in a particular boat, provides the potential for a fire or explosion in the engine compartment.

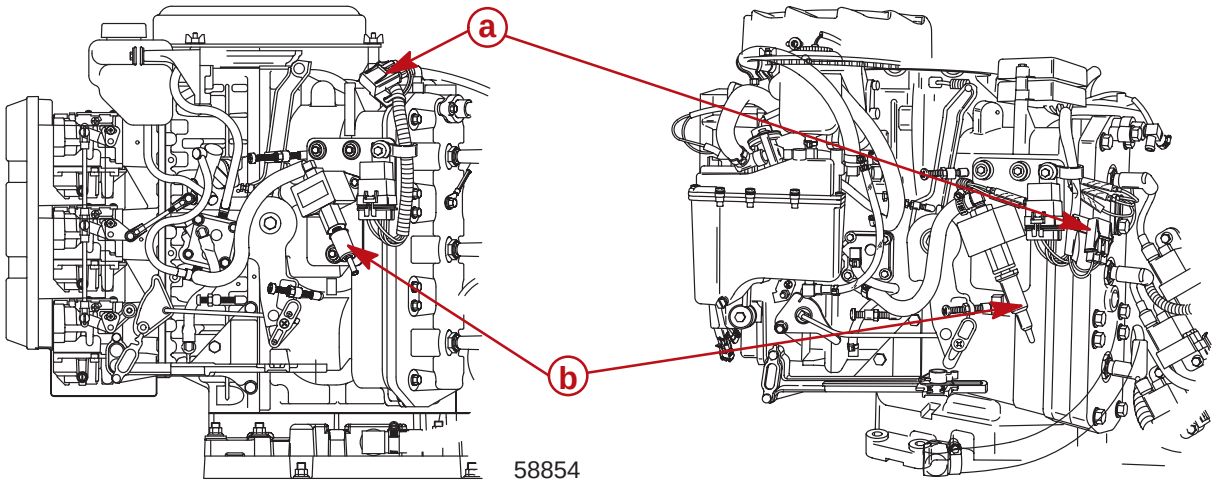

175/210 HP **240 HP**

a - Fuse Holder
b - Fuel Filter

Printed in U.S.A. - © 2001, Mercury Marine
provided by http://www.crowleymarine.com

Owner Notification

A letter will be sent to every registered owner of affected engines. The letter will advise the owner to return their jet boat to their Mercury Jet Drives servicing dealer or any authorized Mercury Marine outboard servicing dealer for the inspection/corrections. The owners will also be advised not to use their boats until it is verified that the inspections/corrections have been completed.

Dealer Inventory

BOATS

All boats in inventory (new, used, and/or consumer) with Jet Drives that fall in the affected serial number range should be checked.

There were engines reworked at the factory. Those engines are identified with a “White or Yellow” marking on the fuse holder and/or body of the filter. These engines do not require any further work. File a warranty claim for the inspection (0.5 hour).

Correction (no rework mark on filter and/or fuse holder)

FUEL FILTER

Remove the fuel line from the filter fitting. Using a 15/16” deep socket, tighten the filter on the fuel pump to 70 lb./in.(7.9 Nm). If the filter starts turning before reaching the torque specification, just continue to tighten the filter to the torque specification. It is not necessary to remove and add sealant to the filter threads. Install fuel line and secure with hose clamps.

FUSE

Remove fuse holder cover. Check the number printed on the top of the fuse. If it has a “3” on the top of the fuse, the fuse is correct. If it has a “20” printed on the top of the fuse, it must be replaced with a 3 Amp fuse.

Parts Required

Qty. one (1) Fuse (3 AMP) – Part number : 88-852526 (if required)

Warranty

Complete warranty claim listing:

- Powerhead serial number
- Warranty Flat Rate Code : SB05 (0.5 hr Labor for fuse only)

  or

- Warranty Flat Rate Code : SB07 (0.7 hr Labor for fuse and filter)
- Part Code : 711
- Failure Code : 40

US and Canada: Complete/process claim via Midas or return warranty claim form.

INTERNATIONAL: Follow instructions issued by Marine Power International office or by your distributor.

provided by http://www.crowleymarine.com

Mercury Marine
Marine Products and Services
W6250 Pioneer Road
P.O. Box 1939
Fond du Lac, WI 54936-1939 USA
Phone: 920-929-5000
www.mercurymarine.com

Dear Mercury Marine Customer:

Our records indicate that you are the owner of a Mercury Jet Drive included in a recall being performed in compliance with the Federal Boat Safety Act. The fuel pump filter and/or fuse that is on your engine provides the potential for a fire or explosion in the engine compartment. Mercury Marine will fix the problem on the affected Jet Drives.

DO NOT OPERATE YOUR ENGINE UNTIL THESE REPAIRS ARE COMPLETED

WHAT YOU SHOULD DO

Contact your authorized dealer, preferably the one who sold you the engine, and make arrangements for inspection/corrections. The dealer will refer to Mercury Outboard Service Information Bulletin 2001-10 or the Mercury Jet Drive Service Information Bulletin 2001-02 for instructions. You must deliver your engine to the dealer and present this letter, the reverse side of which is a claim-form your dealer needs to send to us for reimbursement.

NOTE: *If your boat is in storage, you may want to wait until you remove it from storage to have this service performed.*

WHAT WE WILL DO

We will reimburse the authorized dealer for the corrective action described in the service bulletin.

We apologize for any inconvenience this recall may have caused you; however, we have taken this action to ensure that your boating experiences will be safe and enjoyable.

Sincerely,

Mercury Technical Service Department

provided by http://www.crowleymarine.com

MERCURY

WARRANTY CLAIM

DATE RECEIVED AM ____ PM ____ | DATE PROMISED AM ____ PM ____

ENGINE SERIAL NUMBER

CUSTOMER NAME	DEALER CODE	
ADDRESS	DEALER NAME	
CITY, STATE, ZIP	DEALER ADDRESS	
MODEL / SERIAL NUMBER	CITY, STATE, ZIP	
DATE OF SALE	ORDER NUMBER	LABOR RATE

PRODUCT (CHECK ONE ONLY)

- [ ] OUTBOARD
- [ ] STERNDRIVE
- [ ] INBOARD
- [ ] INFLATABLES
- [X] JET
- [ ] QUICKSILVER P&A (ATTACH RECEIPT)
- [ ] OTHER - SPECIFY _____

DATE FAILED

DATE REPORTED

DATE REPAIRED

HOURS USED

BOAT TYPE

H.I.N.

DESCRIPTION OF FAILURE: Fuel Pump Fuse & Filter – 175/210/240HP Jet Drive

Mercury Outboard Service Bulletin 2001-10

Mercury Jet Drive Service Bulletin 2001-02

FAILURE CODE	FAILURE CODE DESCRIPTION	NOTE: WARRANTY CLAIM MUST BE RECEIVED WITHIN 30 DAYS OF REPAIR DATE TO BE CONSIDERED FOR APPROVAL.	PRE-AUTHORIZATION NUMBER	ENTER DATE
711-40	Fuel Filter - Fix Prog.			

REPAIR PARTS IDENTIFICATION

QTY	PART NUMBER	PART DESCRIPTION	LIST PRICE	TOTAL

I HEREBY AUTHORIZE THE ABOVE REPAIR WORK TO BE DONE AND GRANT YOU AND/OR YOUR EMPLOYEES PERMISSION TO OPERATE THE UNIT AS NECESSARY FOR TESTING AND/OR INSPECTION.

CUSTOMER AUTHORIZATION

LABOR PERFORMED PER FLAT RATE MANUAL

CODE	DESCRIPTION	HOURS	DOLLARS

TOTAL LABOR	
TOTAL PARTS	
SUB TOTAL	
TAX	
SUBLET LABOR (RECEIPT ATTACHED)	
FREIGHT (ATTACH RECEIPT IF OVER $10.00)	
GRAND TOTAL	

ATTENTION

provided by http://www.crowleymarine.com