MERCURY
MARINER
MERCURY Jet Drive
FORCE Outboards

service information

☐ ADVISORY
☑ BULLETIN

No. 2001-09
(Mercury Jet Drives No. 2001-01)

Circulate to: ☑ Sales Manager ☑ Accounting ☑ Service Manager ☑ Technician ☑ Parts Manager

Official Recall Notification Federal Boat Safety Act Voltage Regulator – 240 HP Jet Drive

This Bulletin replaces Mercury Outboard Service Bulletin 2000-15 and Mercury Jet Drives Service Bulletin 2000-03

Models Affected:

240HP JET DRIVES – 2000/2001 Model year product

Serial numbers : 0E370718 through 0E397308

Voltage regulators that are in use on products identified above are at risk of experiencing an electrical short. A short, if it occurs, could be an ignition source for any flammable material in close proximity to the voltage regulator.

In November of 2000, a field campaign was initiated for all 240HP Jet Drives with the serial numbers 0E370718 through 0E394131. The campaign required the replacement of the voltage regulators. However, Mercury Marine has recently learned that the potential for a short, although very remote, still exits in the replacement voltage regulators. This risk can be eliminated by increasing the rating of the fuses from 20A to 30A.

Mercury Marine will replace the regulators and/or fuses on the affected 240HP Jet Drives as described below.

- All 240HP Jet Drives that did not respond to the original field campaign will require both the regulators and fuses replaced (serial number 0E370718 – 0E394131).
- All 240HP Jet Drives that did respond to the original field campaign and those with serial numbers 0E394132 through 0E397308 will require only the fuses replaced.

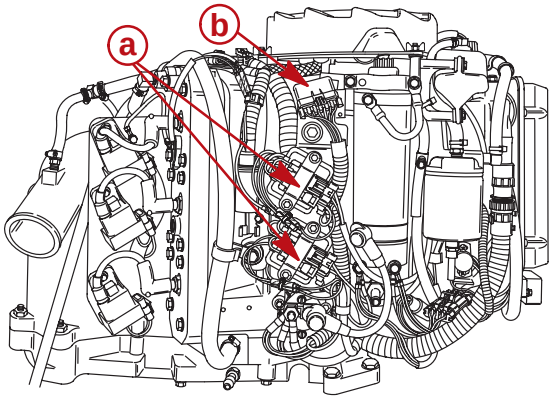

58151

a - Voltage Regulators
b - Fuse Holder

Printed in U.S.A. - © 2001, Mercury Marine
provided by http://www.crowleymarine.com

Owner Notification

All registered owners with engine serial numbers 0E370718 through 0E394131 were sent letters in Nov. of 2000. They will still be responding when their boats are brought out of storage. At that time, they will receive both changes per this bulletin.

A letter will be sent to every registered owner with engine serial numbers 0E394132 through 0E397308. The same letter will also be sent to registered owners who responded to the original campaign initiated in November of 2000. The letter will advise the owner to return their jet boat to their Mercury Jet Drives servicing dealer or any authorized Mercury Marine outboard servicing dealer for the inspection/replacement. The owners will also be advised not to use their boats until it is verified that the proper fuses have been installed.

Dealer Inventory

BOATS

All boats in inventory (new or used) with 240HP Jet Drives that fall in the affected serial number range should be checked. Inspect the regulators for either a “Green” or “White” dot and/or part number (883072-1) stamped on them. Painted dots are located next to the wires exiting the regulator. The part number is located on the opposite side of where the wires exit the regulator. Also, check the fuses. If they are 20A fuses, replace with 30A as shown below.

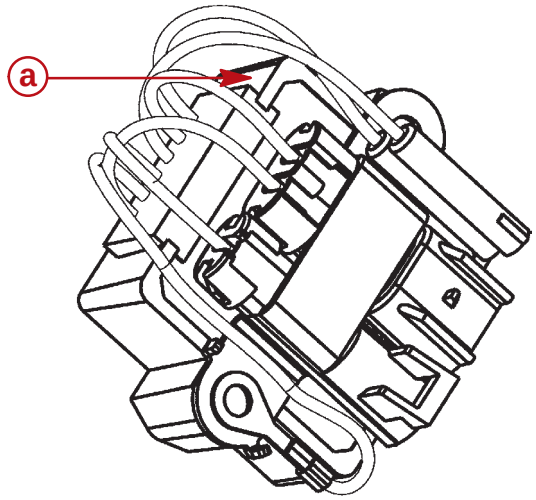

a - Location of Dot

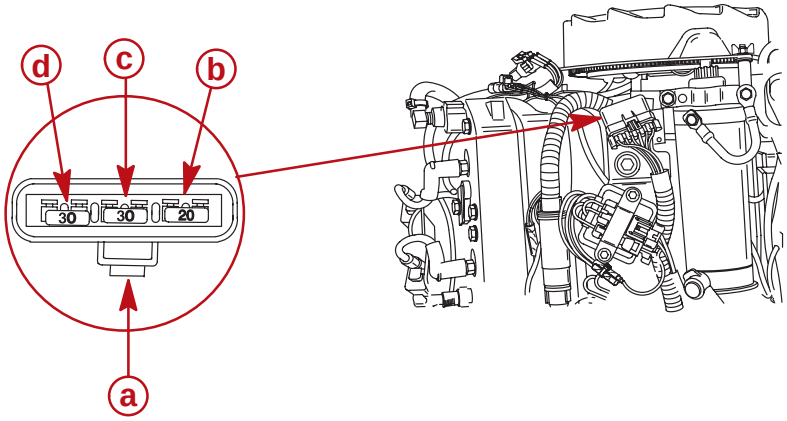

a - Position Fuse Holder with Clip Facing Down
b - 20 Amp Fuse - Accessories and Starting Circuit
c - 30 Amp Fuse - Top Mounted Regulator
d - 30 Amp Fuse - Bottom Mounted Regulator

provided by http://www.crowleymarine.com

Parts Required

Qty. two (2) Fuses	– part number : 88-832969-30
Qty. two (2) Voltage Regulators	– part number : 883072T2

Stickers

A decal is provided to place on Mercury Outboard Service Bulletin 2000-15 and Mercury Jet Drives Bulletin 2000-03. The decal is to inform the reader that the bulletins were superseded by this bulletin.

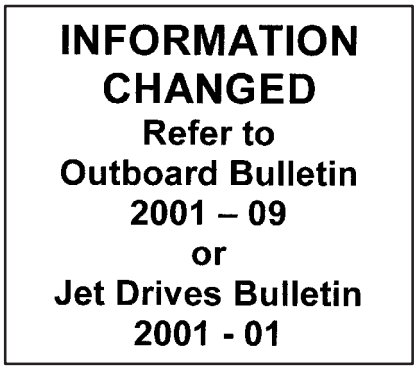

Warranty

Mercury Marine will credit the dealer for the cost of parts and labor for one year from the issuance of this bulletin. Please note the month and year located at the lower left corner of the front page of the bulletin.

Complete warranty claim listing:

- Powerhead serial number(s)
- One (1) hour labor for both the Regulator and Fuse replacements.
  Warranty Flat Rate Code : NJC – 1.0 hr.
- One half (.5) hour labor for Fuse only replacements.
  Warranty Flat Rate Code : NJC – 0.5 hr.
- Part Code : 330
- Failure Code : 40

US and Canada: Complete/process claim via Midas or return warranty claim form. All replaced regulators must be returned to Mercury.

INTERNATIONAL: Follow instructions issued by Marine Power International office or by your distributor.

provided by http://www.crowleymarine.com

provided by http://www.crowleymarine.com

Mercury Marine
Marine Products and Services
W6250 Pioneer Road
P.O. Box 1939
Fond du Lac, WI 54936-1939 USA
Phone: 920-929-5000
www.mercurymarine.com

Dear Mercury Marine Customer:

Our records indicate that you are the owner of a Mercury 240HP Jet Drive included in a recall being performed in compliance with the Federal Boat Safety Act. The voltage regulators that are on your engine are at risk for experiencing an electrical short. A short, if it occurs, could be an ignition source for any flammable material in close proximity to the voltage regulator. Mercury Marine will replace the voltage regulator and/or fuses on the affected Jet Drives.

DO NOT OPERATE YOUR ENGINE UNTIL THESE REPAIRS ARE COMPLETED.

WHAT YOU SHOULD DO

Contact your authorized dealer, preferably the one who sold you the engine, and make arrangements for inspection/replacement of the voltage regulator and/or fuses. The dealer will refer to Mercury Outboard Service Information Bulletin 2001-09 or the Mercury Jet Drive Service Information Bulletin 2001–01 for instructions. You must deliver your engine to the dealer and present this letter, the reverse side of which is a claim-form your dealer needs to send to us for reimbursement.

NOTE: *If your boat is in storage, you may want to wait until you remove it from storage to have this service performed.*

WHAT WE WILL DO

We will reimburse the authorized dealer for the replacement of the voltage regulators and/or fuses in line with the service bulletin.

We apologize for any inconvenience this recall may have caused you; however, we have taken this action to ensure that your boating experiences will be safe and enjoyable.

Sincerely,

Mercury Technical Service Department

provided by http://www.crowleymarine.com

MERCURY

WARRANTY CLAIM

DATE RECEIVED AM ____ PM ____ | DATE PROMISED AM ____ PM ____

ENGINE SERIAL NUMBER

CUSTOMER NAME	DEALER CODE	
ADDRESS	DEALER NAME	
CITY, STATE, ZIP	DEALER ADDRESS	
MODEL / SERIAL NUMBER	CITY, STATE, ZIP	
DATE OF SALE	ORDER NUMBER	LABOR RATE

PRODUCT (CHECK ONE ONLY)

- [ ] OUTBOARD
- [ ] STERNDRIVE
- [ ] INBOARD
- [ ] INFLATABLES
- [X] JET
- [ ] QUICKSILVER P&A (ATTACH RECEIPT)
- [ ] OTHER - SPECIFY _____

DATE FAILED

DATE REPORTED

DATE REPAIRED

HOURS USED

BOAT TYPE

H.I.N.

DESCRIPTION OF FAILURE: Voltage Regulator – 240HP Jet Drive

Mercury Outboard Service Bulletin 2001-09

Mercury Jet Drives Service Bulletin 2001-01

FAILURE CODE	FAILURE CODE DESCRIPTION	NOTE: WARRANTY CLAIM MUST BE RECEIVED WITHIN 30 DAYS OF REPAIR DATE TO BE CONSIDERED FOR APPROVAL.	PRE-AUTHORIZATION NUMBER	ENTER DATE
330-40	Voltage Regulator-Fix Prog.			

REPAIR PARTS IDENTIFICATION

QTY	PART NUMBER	PART DESCRIPTION	LIST PRICE	TOTAL
		Voltage Regulators and/or Fuses		
		(Please fill in correct part #)		

I HEREBY AUTHORIZE THE ABOVE REPAIR WORK TO BE DONE AND GRANT YOU AND/OR YOUR EMPLOYEES PERMISSION TO OPERATE THE UNIT AS NECESSARY FOR TESTING AND/OR INSPECTION.

_____
CUSTOMER AUTHORIZATION

LABOR PERFORMED PER FLAT RATE MANUAL

CODE	DESCRIPTION	HOURS	DOLLARS
NJC			

TOTAL LABOR	
TOTAL PARTS	
SUB TOTAL	
TAX	
SUBLET LABOR (RECEIPT ATTACHED)	
FREIGHT (ATTACH RECEIPT IF OVER $10.00)	
GRAND TOTAL	

ATTENTION

provided by http://www.crowleymarine.com