SPORT JET service bulletin

No. 97-2

Special Adjustment for Stator Failures - Sport Jet 90/120

Models Affected

SPORT JET

1994 and 1995
Sport Jet 90 S/N 0E033711 thru 0E141088

1995
Sport Jet 120 S/N 0E093700 thru 0E141088

The above listed models have experienced a higher than normal incidence of stator failures. The “red” stator was introduced with design improvements for increased reliability and durability. These models were manufactured prior to the installation of the red stator. If a stator failure occurs within the affected serial number range, Mercury Marine will cover parts and labor for three years from the original outboard date of sale. This applies to first and second owners. The bill of sale must be provided if the consumer is not the registered owner. Both pleasure and commercial use will be covered.

Failures of Quicksilver replacement stators purchased for use on the above listed models will be covered for three years from the replacement stator date of sale. Submit a paper warranty claim with a dated receipt of the failed stator.

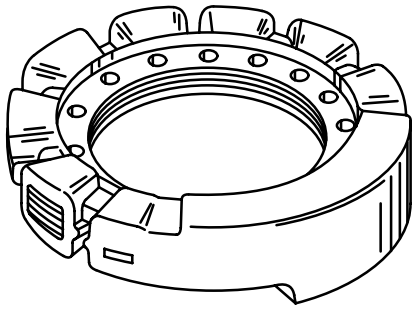

Warranty

Stator failures will be covered by a special warranty for three years from the original date of sale to assure customer satisfaction.

Complete Midas or Paper warranty claim:

- Serial number
- Qty. 1 (P/N) Stator
- One and one half (1.5) hour labor
- Labor Rate Code: OA18 .5 hour
OA15 1 hour
- Failure Code: 323-00

USA and Canada: Tag and hold parts for 60 days after the warranty credit is received.

International: Hold failed stators for inspection/disposition by a Marine Power International technical representative.

provided by http://www.crowleymarine.com