MERCURY Racing

service bulletin

☐ WARRANTY INFORMATION ☑ SERVICE INFORMATION **Outboard No. 2002-08**

☐ PARTS INFORMATION **OEM No. 2002-01**

Circulate to: ☑ Sales Manager ☐ Accounting ☑ Service Manager ☑ Technician ☐ Parts Manager

Use of Tie Bars and Hydraulic Steering on Multiple-Engine Applications

Situation

Some Mercury Racing outboard engines use Standard drive shaft housings, which are not designed for rear tie bar or steering plate installation. Mounting tie bar or hydraulic steering to the powerhead studs on standard models can cause cylinder distortion and premature powerhead wear.

Models with offshore drive shaft housings have provisions to mount a steering plate and can support rear-mounted tie bars or rear-mounted hydraulic steering.

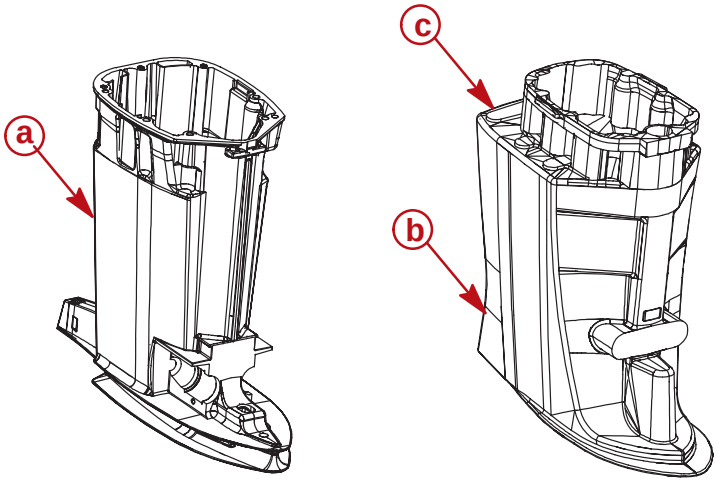

a - Standard drive shaft housing
b - Offshore drive shaft housing
c - Mounting location for steering plate (offshore housings only)

THE INFORMATION IN THIS DOCUMENT IS CONFIDENTIAL AND PROTECTED BY COPYRIGHT AND IS THE PROPERTY OF MERCURY MARINE.

This document is provided for the sole and exclusive use of the original recipient as prescribed by Mercury Marine and may not be distributed or copied, digitally or otherwise, without the prior written consent of Mercury Marine.

Printed in U.S.A. - © 2002, Mercury Marine
provided by http://www.crowleymarine.com

Models With Standard Drive Shaft Housings (Front-Mounted Tie Bars Only)

Models with standard drive shaft housings are not designed for use with rear-mounted tie bars or rear-mounted hydraulic steerting plates. Use front-mounted tie bars and hydraulic steering on multiple-engine applications for the following models only:

Description	Models
225 X Pro Max	All 20 in. Models (L and CL)
300 X Pro Max	All Standard Models (L, CL, XL, CXL)
200 XS OptiMax	All 20 in. Models (L)
250 XS OptiMax	All Models
2.5 EFI	20 in. Sport Models (L and CL)

NOTE: *Models with standard drive shaft housings and hydraaulic steering require one hydraulic cylinder per engine.*

Models with Offshore Drive Shaft Housings (Rear-Mounted Tie Bars)

The following models are suitable for rear-mounted tie bars on multiple-engine applications:

Description	Models
225 X Pro Max	All 15 in. Models (S and CS)
300 X Pro Max	All Offshore Models (L Offshore, CL Offshore, XL Offshore, CXL Offshore)
200 XS OptiMax	All 15 in. Models (SS and CS)
2.5 EFI	All 15 in. and Offshore Models (SS, CS, L Offshore, CL Offshore, XL Offshore, CXL Offshore)

THE INFORMATION IN THIS DOCUMENT IS CONFIDENTIAL AND PROTECTED BY COPYRIGHT AND IS THE PROPERTY OF MERCURY MARINE.

This document is provided for the sole and exclusive use of the original recipient as prescribed by Mercury Marine and may not be distributed or copied, digitally or otherwise, without the prior written consent of Mercury Marine.

provided by http://www.crowleymarine.com