MERCURY MerCruiser **Service Bulletin**

☐ Warranty Information ☑ Service Information **Bulletin No. 2003-04**
☐ Parts Information

Circulate to: ☐ Sales Manager ☐ Accounting ☑ Service Manager ☑ Technician ☑ Parts Manager

Serpentine Belt Shredding on Inboard Models

Models Affected

Model	Serial Number or Year
MIE 5.7L Carbureted Tow Sports engines	0L678785 to 0M391480
MIE 350 MPI Tow Sports engines	0M310022 to 0M391480
MIE Black Scorpion (5.7L) Tow Sports engines	0L678037 to 0M391480
MIE Black Scorpion (6.2L) Tow Sports engines	0L679131 to 0M390795
MIE 5.7L Carbureted Inboard engines	0L677227 to 0M391480
MIE 350 MPI Inboard engines	0L678399 to 0M391480
MIE 6.2L Inboard engines	0M310100 to 0M390795

NOTE: *This does not affect MCM sterndrive engines.*

Situation

If you have had a repeat serpentine belt shredding condition on an engine between the serial numbers given above, check the alternator pulley alignment.

Inspection / Correction

Alternator Pulley Alignment

1. Use a sturdy, metal straight edge that is at least 40.7 cm (16 in.) long.
2. Place the straight edge across the crankshaft pulley and then move it up to the alternator pulley. The straight edge should be just under the alternator pulley, not across the pulley itself.
3. Compare the angle of the outer face of the alternator pulley to the straight edge. It should be almost parallel. The outer face of the alternator pulley may be slightly in front of or behind the straight edge, but this does not cause a problem.

THE INFORMATION IN THIS DOCUMENT IS CONFIDENTIAL AND PROTECTED BY COPYRIGHT AND IS THE PROPERTY OF MERCURY MARINE.

This document is provided for the sole and exclusive use of the original recipient as prescribed by Mercury Marine and may not be distributed or copied, digitally or otherwise, without the prior written consent of Mercury Marine.

provided by http://www.crowleymarine.com

NOTE: *The alternator pulley does not have to be touching the straight edge. However, it must be parallel to it.*

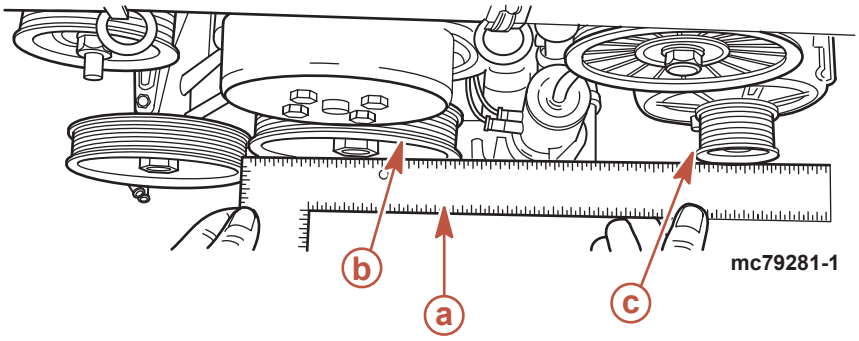

a - Straight edge
b - Crankshaft pulley
c - Alternator pulley parallel to straight edge

4. If the pulley is not parallel to the straight edge, remove the serpentine belt and loosen the 2 mounting bolts and nuts at the upper alternator mounting bracket.
5. Remove the single M8 bolt from the lower alternator mounting brace.

NOTE: *Ensure that the 2 upper alternator mounting bolts and nuts are loose enough so that you can move the alternator around. When doing step 7., the alternator must be free to pivot.*

6. Add spacer, P/N 23-52095, between lower mount brace and the alternator.
7. Install the M8 bolt through the lower brace, spacer, and into the alternator. Torque only the M8 bolt, leaving both upper alternator mounting bolts and nuts loose.

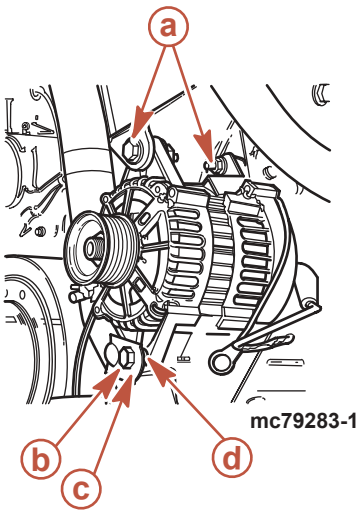

a - Upper mounting bolts and nuts
b - Lower M8 bolt
c - Lower alternator brace
d - Spacer positioned between lower alternator brace and alternator.

Description	Nm	lb-in.	lb-ft.
M8 bolt	11		8

THE INFORMATION IN THIS DOCUMENT IS CONFIDENTIAL AND PROTECTED BY COPYRIGHT AND IS THE PROPERTY OF MERCURY MARINE.

This document is provided for the sole and exclusive use of the original recipient as prescribed by Mercury Marine and may not be distributed or copied, digitally or otherwise, without the prior written consent of Mercury Marine.

provided by http://www.crowleymarine.com

8. Recheck the alignment of the alternator pulley with straight edge.

NOTE: The alternator pulley does not have to be touching the straight edge. However, it must be parallel to it.

9. If the alternator pulley is parallel to the straight edge, tighten the 2 upper alternator mounting bolts and nuts. Torque the alternator mounting nuts.

Description	Nm	lb-in.	lb-ft.
Alternator mounting nuts	48		35

Seawater Pump Pulley Alignment

While this does not normally cause a belt shredding problem, this pulley should be checked also.

1. Use straight edge and check the seawater pump pulley the same way you checked the alternator pulley.

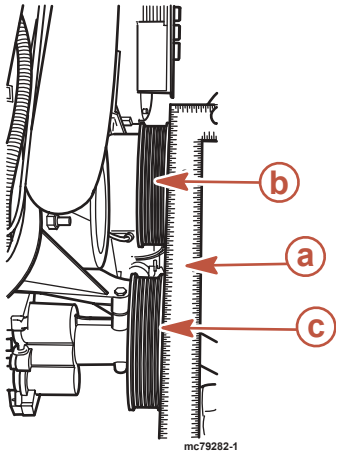

a - Straight edge
b - Crankshaft pulley
c - Seawater pump pulley parallel to straight edge

2. The seawater pump pulley must be parallel within 1.5 mm (1/16 in.) of the straight edge. If pulley is not as outlined, replace the pump's bracket with P/N 865143T.
3. Install pump to new bracket. Torque seawater pump fasteners.

Description	Nm	lb-in.	lb-ft.
Seawater pump fasteners	9.9	88	

NOTE: If original seawater pump bracket had washers between it and the engine cylinder block, discard these washers. New bracket does not use a washer between it and the cylinder block.

NOTE: There has been a stiffening tab added to the new bracket. Because of this, the location of the mounting stud and bolt (to the cylinder block) has to be changed when installing this bracket.

4. Move stud from lower cylinder block hole up to the one that had the bolt in it.
5. Install the bracket onto the stud and then rotate the bracket to install the original bolt through the lower bracket hole.

THE INFORMATION IN THIS DOCUMENT IS CONFIDENTIAL AND PROTECTED BY COPYRIGHT AND IS THE PROPERTY OF MERCURY MARINE.

This document is provided for the sole and exclusive use of the original recipient as prescribed by Mercury Marine and may not be distributed or copied, digitally or otherwise, without the prior written consent of Mercury Marine.

provided by http://www.crowleymarine.com

6. Torque seawater pump bracket fasteners.

Description	Nm	lb-in.	lb-ft.
Seawater pump bracket fasteners	41		30

Serpentine Belt

1. Reinstall new serpentine belt and adjust it until there is 15-19 mm (5/8-3/4 in.) deflection between the upper 2 pulleys.

Part Numbers

Description	Part Number
Spacer	23-52095
Seawater pump bracket	865143T
Serpentine belt	57-865423005

Warranty

Mercury Marine will credit the dealer for the cost of labor through June 30, 2006. Submit warranty claim through your normal warranty-processing channel, listing:

- MerCruiser serial number

For alternator pulley.

- 0.8 hour labor
- Flat Rate Code and Labor – ME51
- Part Code – 301
- Failure Code – 46

For changing seawater pump bracket.

- 1.5 hour labor
- Flat Rate Code and Labor – MC17
- Part Code – 614
- Failure Code – 46

Old Part or Parts:

- USA and Canada: Return with warranty claim.
- International: Follow Instructions issued by Marine Power International Office or by your distributor.

THE INFORMATION IN THIS DOCUMENT IS CONFIDENTIAL AND PROTECTED BY COPYRIGHT AND IS THE PROPERTY OF MERCURY MARINE.

This document is provided for the sole and exclusive use of the original recipient as prescribed by Mercury Marine and may not be distributed or copied, digitally or otherwise, without the prior written consent of Mercury Marine.

provided by http://www.crowleymarine.com