service bulletin

TO: SERVICE MANAGER ☐ TECHNICIANS ☐
PARTS MANAGER ☐

No. 96-11

Hurth Transmissions

Models

HSW 630-A Marine Transmissions

Problem

Fluid levels higher than the full mark when the engine and transmission are installed in the boat.

Solution

Fluid levels should be checked with the boat at rest in water. If transmission fluid appears to be higher than the full mark on the dipstick before running engine package, remove fluid from transmission to read between the A and B mark on the dipstick (shown below). Run engine, shifting transmission in and out of gear to bring up the temperature of transmission fluid. After running engine package to increase the temperature of the transmission fluid (to compensate for expansion), shut down engine and immediately check the level of the transmission fluid. If fluid level is above the full mark (A), remove excess fluid to read between the A and B mark on the dipstick.

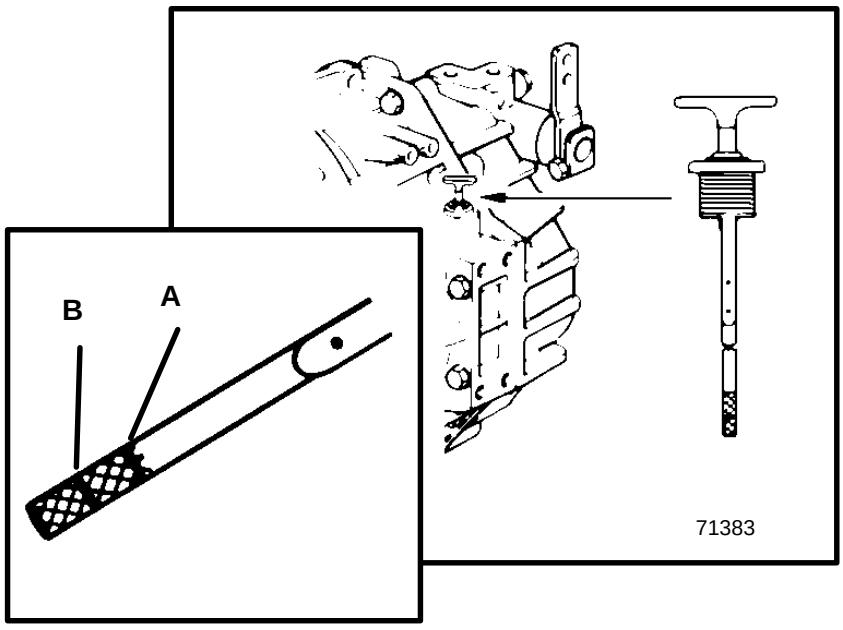

provided by http://www.crowleymarine.com