service bulletin

TO: SERVICE MANAGER ☐ TECHNICIANS ☐
PARTS MANAGER ☐

No. 93-30

A. INCORRECT ANEROID ADJUSTMENT

Models

MCM D7.3L and MIE D7.3L Diesels
Serial Number: 0F220794 and below, and only those engines produced using wire to secure the aneroid adjustment screw. If there is no wire securing the adjustment screw, it means that the adjustment has all ready been done.

Problem

Aneroid adjustment set incorrectly (too lean) from the factory.

Correction

1. Remove e-clip from aneroid rod.
2. Remove aneroid rod from lever.
3. Remove convoluted seal from end of aneroid.
4. Remove rod from hole in lever.
5. Remove and discard wire from adjustment screw.
6. Loosen the jam nut and turn the screw in (clockwise) 1/4 turn. Tighten the jam nut.
7. Screw the rod in or out until rod will enter the hole with out pushing or pulling the lever (no load).
8. Install e-clip and convoluted seal.
9. Do not use wire to secure the adjusting screw. It is not necessary, and serves as an indication that the job was completed.

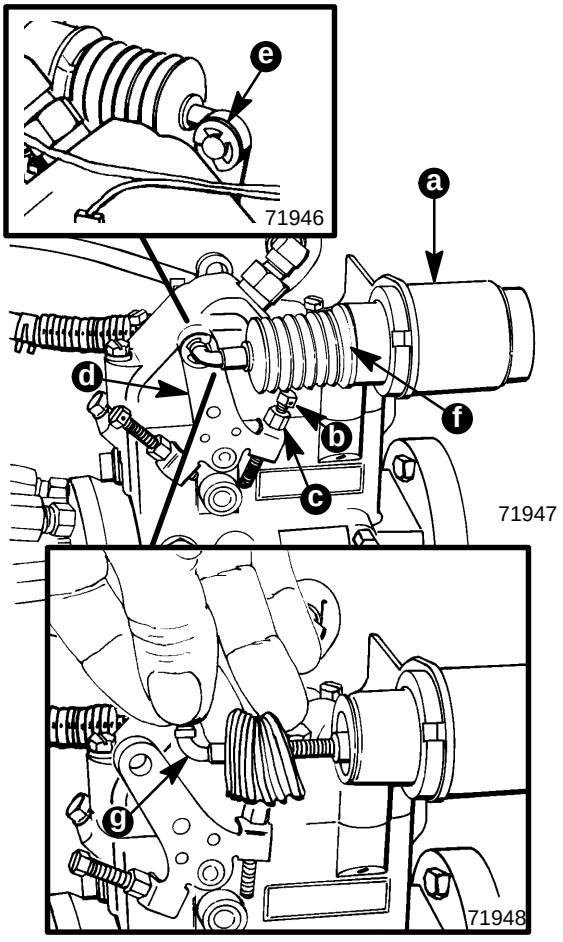

a - Aneroid Device
b - Adjusting Screw
c - Jam Nut
d - Lever
e - E-Clip
f - Convoluted Seal
g - Aneroid Rod

provided by http://www.crowleymarine.com