A. DHB Power Steering Valve (806034A1)

Models Affected

All Alpha One Generation II/ Bravo One/Two/ Three/ and 502 EFI Black Hawk (1994 product only).

Problem

Stiff Steering, If the steering is stiff in any 1994 model boat the following must be checked to locate the problem.

NOTE: There is absolutely no adjustment on the (806034A1) DHB Power steering valve assembly, Do not attempt to alter the adjustment in any way. The assembly is pre-adjusted at the factory and requires no field adjustment.

1. Disconnect the steering cable from the hydraulic control valve and clevis assembly.
2. Remove the steering wheel **center hub cover.** Use a **(Dial Type)**or a **(Beam Type)** Inch Pound (metric)torque wrench with a short extension and the proper socket to fit the bolt or nut.
3. Using the Torque wrench on the nut or bolt, turn the steering wheel at a slow steady rate of one turn per minute, no more than 1/4 turn to the right. Read and record the Torque value. Center the wheel. Turn the steering wheel 1/4 turn to the left. Read and record the Torque value.
4. Reconnect the steering cable. Make sure a source of water is supplied to the drive and engine. Start the engine and make sure the drive is in a straight forward position. Repeat step three above. Turn off engine.
5. After you read the values in both directions subtract the torque values determined in step three. The remainder will be the Torque required to move the valve spool assembly. If the remainder is more than 20 Inch Pounds (2.24 Nm) the valve assembly should be replaced. If the remainder is less than 20 Inch Pounds (2.24 Nm) check out the Steering Helm and cable assembly for the problem. Normal torque values for the steering valves are 15-20 inch pounds (1.68-2.24 Nm).
6. Make sure that the steering cable does not have anything attached to the casing. Misc. wires or hoses that have been attached with plastic stay-straps can cause some of the stiffness to the steering by limiting the free movement of the cable that allows the valve to move as the drive. Also, check the power steering hose routing to make sure that the hoses are not routed in such a way that the valve is restricted in movement. This will cause some stiffness as well by not allowing the valve to move freely as the drive turns from side to side.
   Be sure to check the steering cable length. If it is too long, it will push the valve spool to one side and will cause some binding and stiffness in the steering. If the cable is to short it will pull on the valve spool and cause stiff steering

(Any side loading of the steering spool(tube) can cause the valve assembly to work stiff).

Parts Required

1) 806034A1 Valve Assembly (date coded 230 3) or newer. The date code can be located on the control valve to the right of the hydraulic hose lines on a flat area about 1/4 inch (6.35 mm)wide by 1 inch (25.4 mm) long. The numbers are stamped in the casting.

The (230 3) listed above is the Julian date code stamped on the unit to identify the date and year it was built, the (230) indicates the day and the (3) indicates the year.

Repair

Remove the complete control valve assembly and replace it with a new 806034A1 assembly.

provided by http://www.crowleymarine.com

Warranty

Fill out a warranty claim and send to your normal warranty processing center.

Labor code: **MS21**

Labor: **1.5**

The following line drawings show the revised hose routing for the complete gasoline engine line from the 3.0LX thru the 502 EFI.

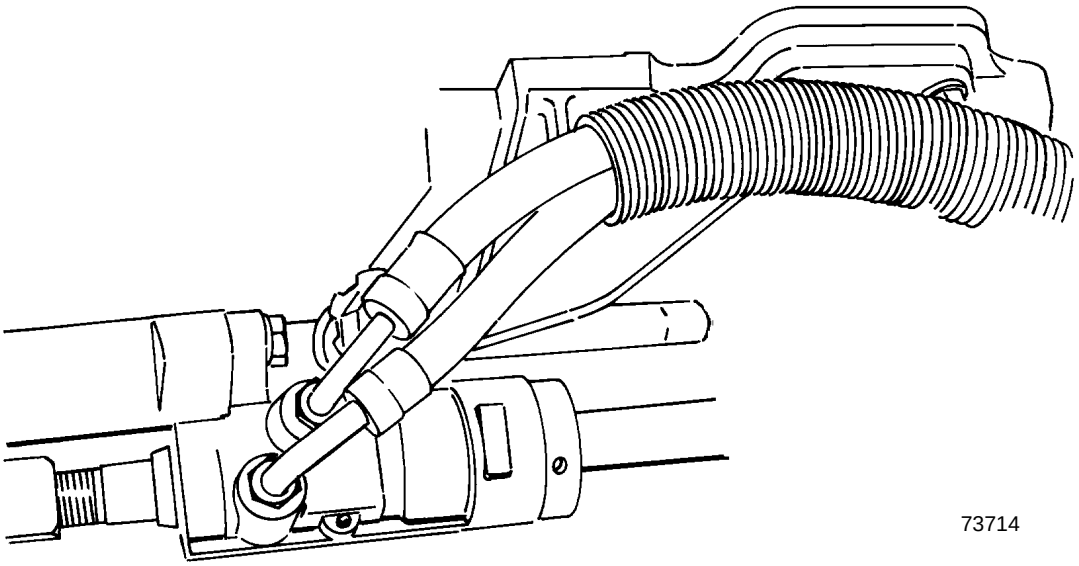

figure (1)

Figure 1 above is for the 4.3 L / 4.3 LX V-6 only later models.

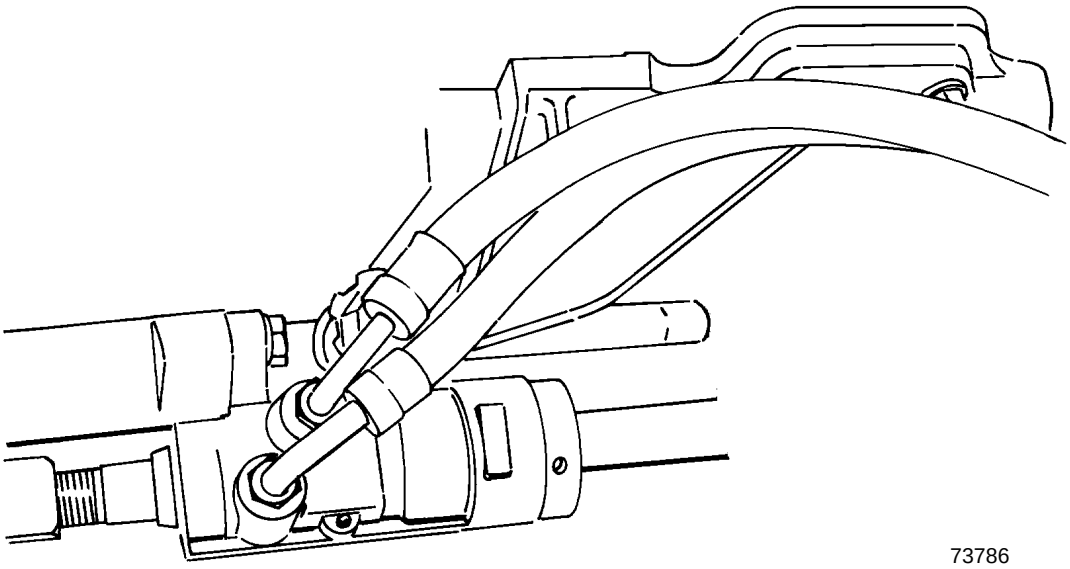

figure (2)

Figure 2 above is for the 3.0LX / 5.0L / 5.0LX / 5.7L 350 Magnum / 7.4L / 454 Magnum / 454 Magnum EFI, also earlier (94) 4.3L and 4.3LX and (early 502 EFI models with oil cooler return lines on the port side of the cooler).

provided by http://www.crowleymarine.com

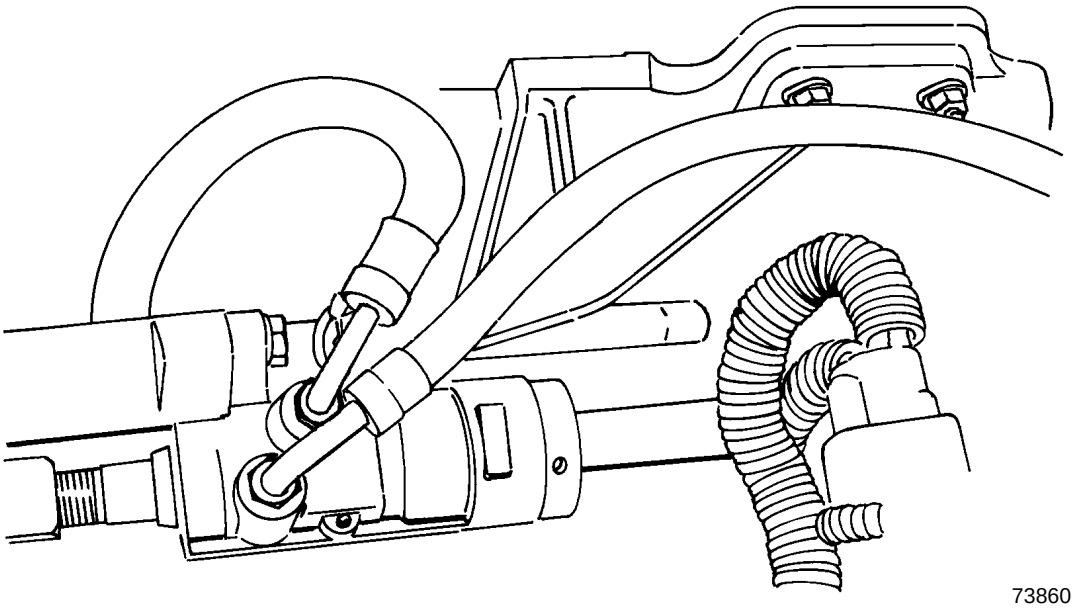

figure (3)

Figure 3 above is for the 502 EFI with oil cooler return lines on the starboard side of the cooler.

The following chart may be used to record the values taken.

	1/4 turn Right	1/4 Turn Left
Helm / Cable &Steering Valve		
Helm & Cable		
Steering Valve		

Normal value on valve is [15 to 20 lb. in.] [1.68 to 2.24 Nm]

Following is a list of the new DHB power steering hoses listed by engine.

Engine	Pressure Hose	Return Hose	Cut New Return Hose Length To
3.0LX	806684	806221-42	14 in. (355 mm)
4.3L / 4.3LX	806222-16	806221-42	50 in. (1270 mm)
5.0L / 5.0LX	806222-16	806221-42	50 in. (1270 mm)
5.7L	806222-16	806221-42	50 in. (1270 mm)
350 Magnum	806222-16	806221-42	50 in. (1270 mm)
7.4L	806222-16	806221-42	40 in. (1016 mm)
454 Magnum	806222-16	806221-42	40 in. (1016 mm)
454 Magnum EFI	806222-16	806221-42	40 in. (1016 mm)
502 Magnum EFI	806222-16	806221-42	26 in. (660 mm)

provided by http://www.crowleymarine.com