merCruiser
STERN DRIVES & INBOARDS

service bulletin

TO: SERVICE MANAGER ☐ MECHANICS ☐
PARTS MANAGER ☐

▲ Revised 10-6-93

No. 93-24

A. BRAVO THREE BEARING CARRIER OIL SEALS

Models

BRAVO THREE DRIVES (ONLY)

Problem

Bearing carrier oil seal, The rubber seal may be loose in the steel casing and could cause oil to leak from the outer propeller shaft area and also may allow water to leak into the drive unit, In either case this could cause damage to the drive unit, and they should be replaced.

SERIAL NUMBER GROUPS THAT REQUIRE SEAL REPLACEMENT

0D860230 THRU 0D860231
0D763691 THRU 0D763710
0D784088 THRU 0D784127
0D860240 THRU 0D860294
0F050000 THRU 0F050035
0F050037 THRU 0F050311
0F050313 THRU 0F050368
0F050370 THRU 0F050381
0F050384 THRU 0F050390
0F050400 THRU 0F050429
0F050433 THRU 0F050439
0F050454 THRU 0F050456
0F050460 THRU 0F050462
0F050466 THRU 0F050474
0F050478 THRU 0F050480
0F050496 THRU 0F050499
0F125725 THRU 0F125728
0F125732 THRU 0F125735
0F186271 THRU 0F186272
0F186296 ONLY
0F112243 THRU 0F112274
0F186073 THRU 0F186078
0F186099 THRU 0F186101
0F186105 THRU 0F186107
0F186111 THRU 0F186147
0F125500 THRU 0F125502
0F050312 ONLY
0F050269 ONLY
0F050383 ONLY

provided by http://www.crowleymarine.com

Tools Required

(1) 91-805374--1 Bearing Carrier Tool

▲ (1) 91-805372 Oil Seal Installation Tool

Parts Required

(2) 26-805080 Oil Seals
(Shown in the illustration below)

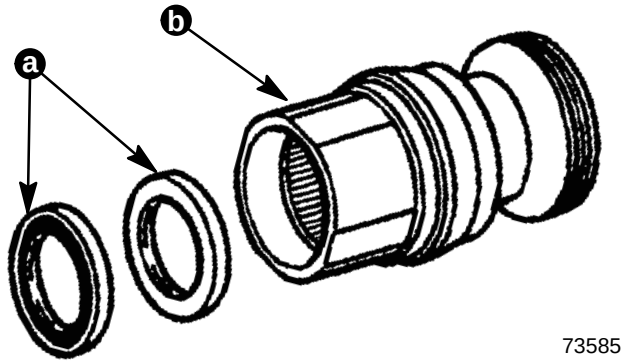

73585

a - Oil Seals (2)
b - Bearing Carrier

Repair

Follow the repair procedures in service manual Number (11) section (3D) Gear Housing Repair.

Warranty

Fill out a warranty claim and send to your normal warranty processing center.
Labor code: MD27
Labor: 2.8 hrs

provided by http://www.crowleymarine.com