merCruiser
STERN DRIVES & INBOARDS

service bulletin

TO: SERVICE MANAGER ☐ MECHANICS ☐
PARTS MANAGER ☐

No. 93-19

Blackhawk Drive Applications

The MerCruiser Blackhawk Drive, a counter rotating surfacing drive, has been released for the 1994 Model Year. The drive is only available as a package with the 1994 Model 502 Magnum EFI Engine.

The only approved application of the Blackhawk is when it is coupled to a 1994 Model 502 Magnum EFI Engine (engine model number 4-5021E1GS). The use of the Blackhawk with any other engine will be considered a modification of the product and will void the warranty on the drive, the engine and associated components.

Use of the Blackhawk with engines other than 1994 Model 502 Magnum EFI's could result in performance, shifting and coupler problems. The 1994 Model 502 Magnum EFI has special EFI calibration and components to meet the requirements of the Blackhawk Drive.

Additional applications may be approved in the future. You will be notified if and when such additions/approvals are made.

The following points should be considered when making the determination to use the Blackhawk Drive Unit:

- The Blackhawk Drive is designed for "Single Engine High Performance Sport Boats" that are 20-25 ft. in length, that run in excess of 65 M.P.H. .
- It is designed for boats that have a natural "Bow-Lift" (where the stern drive unit is not needed to lift the bow of the boat).
- The Blackhawk Drive is designed to operate with the propeller shafts running parallel to the water surface. The boat should be designed to run with a minimum wetted surface without porpoising at wide-open-throttle (W.O.T.). To achieve this, "Delta-Pads", "Notches", or "Steps" are often used.
- **Should Not** be used on boats that have a "Hook" in the back of the boat hull or that have "Lifting-Strakes" that run to the back of the boat (which would lift the stern of the boat and drop the bow).
- The Blackhawk Drive Unit uses an "X" - Dimension that is 2-1/2 inches higher than the standard dimension used for the Bravo One Drive Unit (See "Transom Cutout" section in the Power Package Installation Manual for further information).

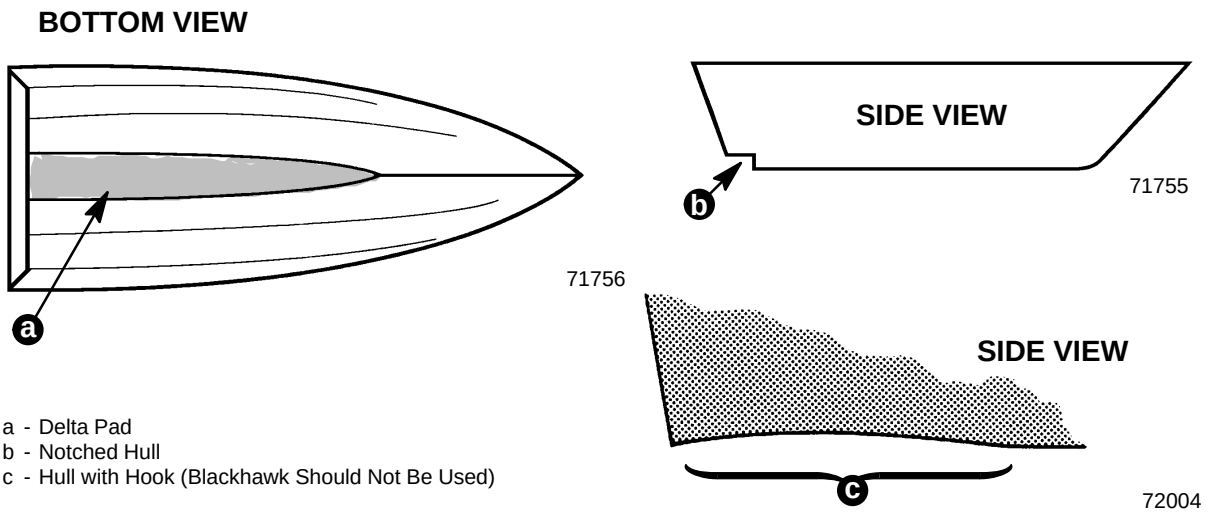

a - Delta Pad
b - Notched Hull
c - Hull with Hook (Blackhawk Should Not Be Used)

Damage to the product resulting from the failure to comply with these recommendations will not be covered by MerCruiser's limited warranty.

provided by http://www.crowleymarine.com