mercruiser STERN DRIVES & INBOARDS service bulletin

TO: SERVICE MANAGER ☐ MECHANICS ☐
PARTS MANAGER ☐

No. 93-16

A. EXHAUST BELLOWS FALLING OFF

Models

All Alpha Generation II / Bravo One / Bravo Two

Problem

Exhaust bellows coming off of a new Alpha One Generation II or from a new Bravo One / Two.

Fix

1. Remove the stern drive unit
2. Clean old adhesive from bellows mounting flanges on the gimbal housing and bell housing using either Quicksilver spray paint leveler or lacquer thinner.
3. Clean old adhesive from mounting surfaces of exhaust bellows.
4. Apply bellows adhesive 92-86166 to mounting surfaces on inside of bellows. Allow adhesive to dry until no longer tacky (approximatley 10 minutes).

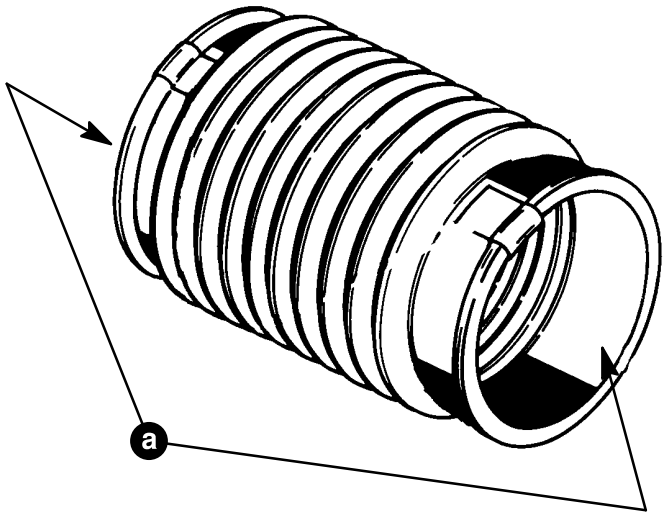

22079

a - Mounting Surface (Apply Bellows Adhesive)

provided by http://www.crowleymarine.com

5. Install exhaust bellows onto gimbal housing. Position hose clamp as shown. Tighten hose clamp screw using a screw driver thru access holes in gimbal housing.

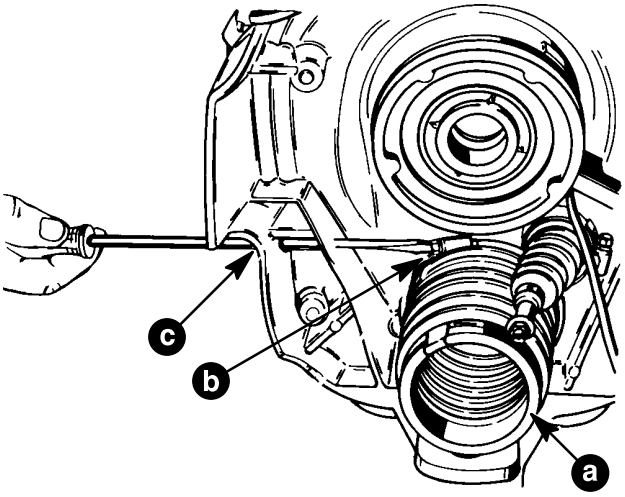

22081

a - Exhaust Bellows
b - Hose Clamp
c - Gimbal Housing Access Hole

6. Install exhaust bellows on bell housing as follows:
   a. Remove the shift shaft from the bell housing by first applying heat to the aluminum shift lever at the screw with a torch lamp to soften the lock tite to ease the removal of the small stainless steel screw. If no heat is applied the screw may be damaged and you will have to split the lever to remove it and replace it with a new one.
   b. Place a hose clamp over bellows end.
   c. Place expander tool 91-45497A1 into the first convolution of the bellows.

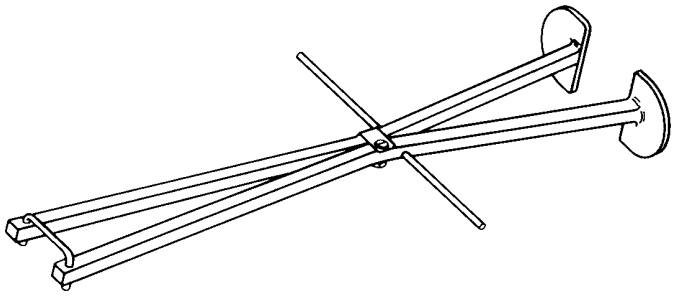
22161

provided by http://www.crowleymarine.com

d. Pull the tool until tool touches the flange on the bell housing (hose starts to slip onto the flange); then release the tool.

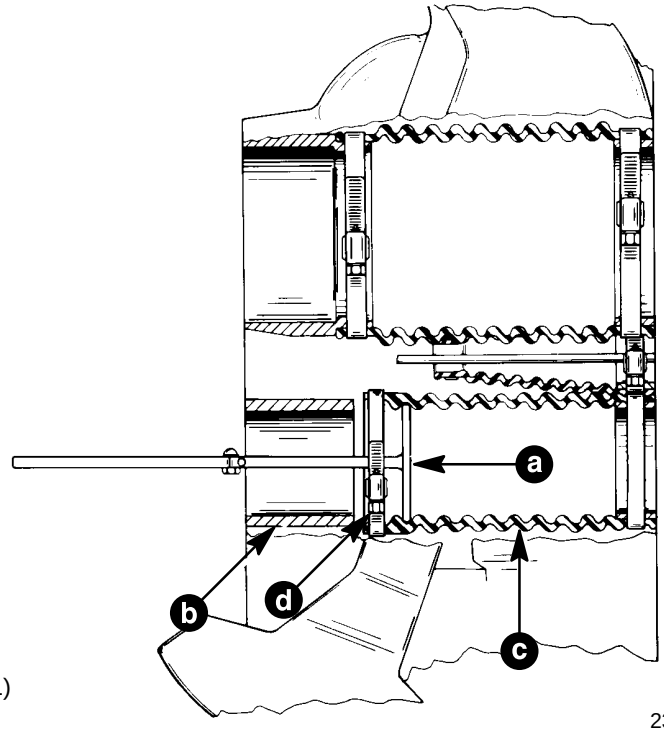

23154

a - Expander Tool (91-45497A1)
b - Bell Housing Flange
c - Exhaust Bellows
d - Hose Clamp

provided by http://www.crowleymarine.com

e. Reposition the tool into the third bellows convolution.

f. Pull the bellows the rest of the way onto the bell housing flange.

g. Tighten hose clamp.

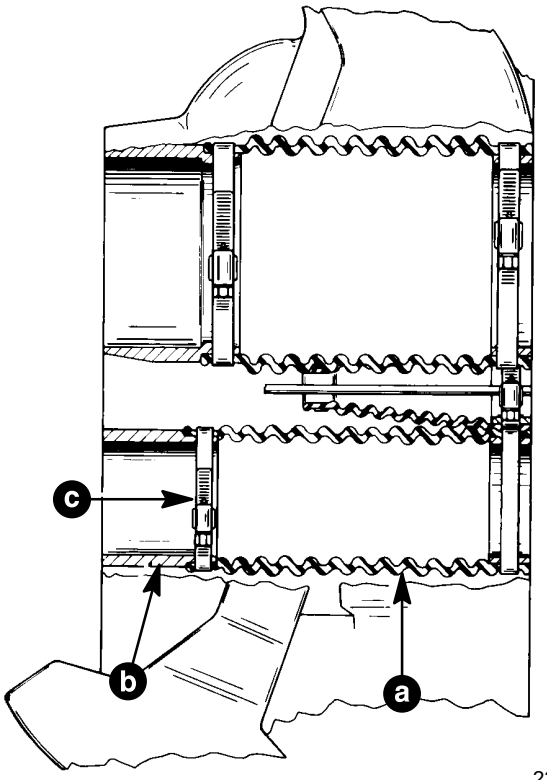

23158

a - Exhaust Bellows
b - Bell Housing Flange
c - Hose Clamp

7. Reinstall the stern drive unit.

Warranty

If the unit is under warranty, fill out a warranty claim and send to your normal warranty processing center.

Labor Code: MT23

Labor: 1.5 Hours

provided by http://www.crowleymarine.com