mercruiser
STERN DRIVES & INBOARDS

service bulletin

TO: SERVICE MANAGER ☐ TECHNICIAN ☐
PARTS MANAGER ☐

▲ = Revised February, 1995

No. 93-15

NOTICE: The information contained in this Service Bulletin supercedes all previous bulletins, including 92-6.

Rochester 4 Barrel Quadrajet Carburetor

MCM 205/4.3LX Rough Idle or Can't Adjust Idle Mixture Screws

Possible cause could be air leak through carburetor mounting gasket. This gasket may leak in the area of the screw that holds the throttle body to the float bowl. This screw (a) is in a hole in the base of the carburetor, on the throttle lever side (Figure 1.). Because of this hole, the gasket may not be making an air tight seal. Remove carburetor from intake manifold. Inspect gasket to see if it has covered screw hole completely to seal out air leak. Do not remove screw, just fill screw hole with a silicone sealer. Using new mounting gasket, install carburetor. Torque carburetor mounting nuts and bolts to 20 lb. ft. (27 N·m).

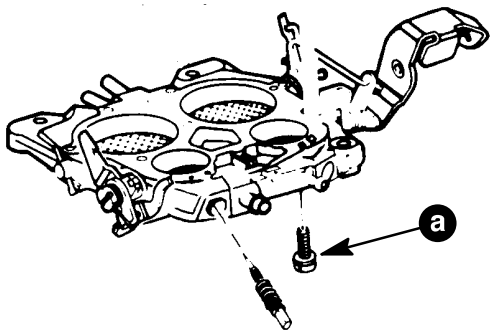

Figure 1.

(1) 27-52457--2 Mounting Gasket

Engine RPM "Hunts" at Idle Speed

Engine RPM won't hold steady at idle. Varies up and down 300-500 RPM. This indicates that there is a possible vacuum leak. Check for vacuum leak at the normal locations first: intake manifold gasket, carb gasket, etc. If the vacuum leak isn't found at the normal locations, it might be caused by loose base screws (a), in Figure 1. Remove carburetor from engine, and drain fuel from it. Turn carb upside-down and check the tightness of the two screws that hold base to carb float bowl. Remove the screws and apply a small amount of Loctite 271 to the threads. Reinstall screws and tighten securely.

(1) 27-52457--2 Mounting Gasket

provided by http://www.crowleymarine.com

MCM 4.3LX and 5.7L Alpha Hard Starting or Rich Idle

The engines that fall into the serial numbers listed may have the choke linkage installed incorrectly. If you experience this type of problem on an engine in the range given, check the choke rod for correction installation.

4.3LX 0C755446-0C755512

5.7L 0C755369-0C755396 and 0C755528-0C755592

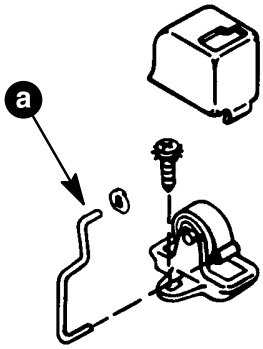

a - Choke Rod

Correct Installation

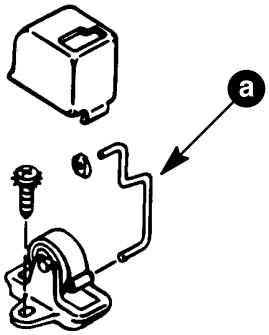

a - Choke Rod

Incorrect Installation

Automatic Choke Problem

If the engine runs rich for a long period of time after start-up or the choke takes a long time to come off, the automatic choke may be at fault. The failure to the choke is that the pin (that anchors the spring to the base) rotates in the base. This causes the choke “timing” to be off. Start a cold engine and watch the choke operation. If choke doesn’t come off or comes off very slowly, the problem could be the choke. Refer to the engine’s part list for correct replacement part number.

Carburetor Flooding

When removing the air horn from a carburetor for this problem, look at the pull clip for the needle. This pull clip must be hooked over the end of the float arm, not in the holes. If the clip is hooked in either hole, the needle will not seat properly. This could be the reason for the flooding problem.

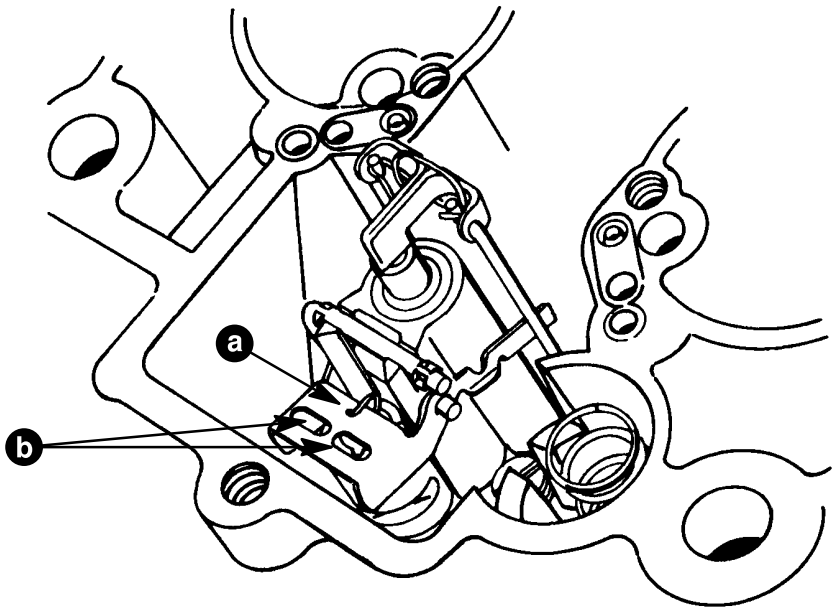

70818

a - Hook Over End of Float Arm
b - DO NOT Hook in These Holes

provided by http://www.crowleymarine.com

▲ MCM 5.0LX Down in Power

We have had some reports of this engine being down in power above 3000 RPM. To correct this problem, do the following;

1. Reset the secondary air valve (a) spring windup to 60 grams.
2. Replace the "stepped" flame arrestor stud, (b). Replacement stud doesn't have "step". The "stepped" stud could cause the secondary air valve to stick partially closed.

16-91842 Stud, (c).

11-28941 Nut, (d), to take the place of the upper step so flame arrestor doesn't get over tightened.

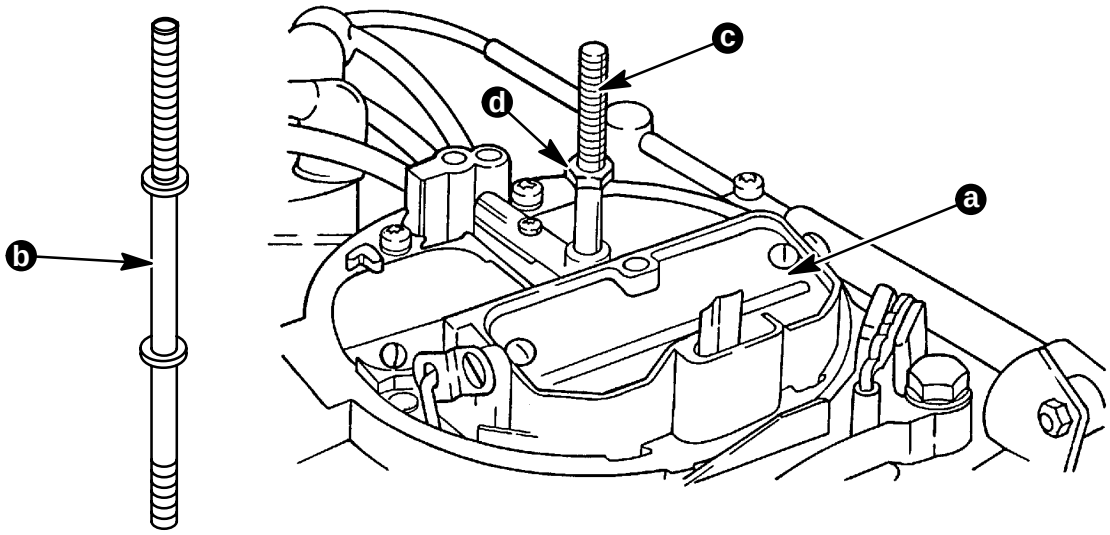

74570

Suggested Changes for Running at Altitude

For gear ratio changes, see Service Bulletin 93-7. The following is meant to be a guide when the engine is going to be used at altitudes other than sea level. If you are at sea level and your customer is going to a higher elevation for a short period of time, no changes to the gear ratio, timing or carburetor should be done. If your customer will be doing all their boating at higher altitudes, then changes can be done. If the boat is then brought back to sea level, everything has to be changed back for sea level use. Generally, timing can be advanced 2 degrees for every 5000 ft. (1525 m) elevation to help engine performance.

⚠ CAUTION

To prevent engine damage, do not set timing any higher than for the lowest elevation that customer will be running the boat.

Before ordering secondary metering rods, look at the chart to try and determine the size of the stock metering rods. We suggest that you look at the size stamped on the secondary metering rods in the carburetor that your working on before ordering jets.

IMPORTANT: Change only the secondary metering rods.

provided by http://www.crowleymarine.com

MCM STERN DRIVE ENGINES

Model	Carburetor Part Number	5000 ft. (1525 m) and Below	5000-9000 ft. (1525-2745 m)	9000 ft. (2745 m) and Above
4.3LX	3304-9354A_ (17084516)	ED Stock Jet	CL	CT
5.0LX	1347-9661A_ (17080565)	CL Stock Jet	CT	DW
5.7L Alpha	1347-9662A_ (17080561)	CL Stock Jet	CT	DW
350 Mag	1347-8289A_ (17080562)	CH Stock Jet	DB	CG
7.4L Bravo and 454 Mag Alpha	1347-8291A_ (17080563)	DP Stock Jet	CT	DW
454 Mag Bravo	1347-9863A_ (17059280)	DA Stock Jet	DH	CT
502 Mag Bravo	1347-814623A_ (17089112)	DC Stock Jet	EL	EC

MIE INBOARD AND SKI ENGINES

Model	Carburetor Part Number	5000 ft. (1525 m) and Below	5000-9000 ft. (1525-2745 m)	9000 ft. (2745 m) and Above
5.0L	1347-9415A_ (17080565)	CL Stock Jet	CT	DW
5.7L Ski	1347-9415A_ (17085013)	CH Stock Jet	DB	CG
5.7L	1347-8289A_ (17080562)	CH Stock Jet	DB	CG
5.7L	1347-816373A_ (17090210)	DA Stock Jet	DH	CT
7.4L	1347-8288A_ (17080560)	CL Stock Jet	CT	DW
7.4L	1347-816467A_ (17090211)	DA Stock Jet	DH	CT

Notice: The secondary metering rods will have to be purchased from a Rochester products dealer because Quicksilver will not be stocking them.

Metering Rod Letters	Rochester Part Number
CG	7045778
CH	7045779
CL	7045782
CT	7045983
DA	7046010
DB	7047806
DC	7047816

Metering Rod Letters	Rochester Part Number
DH	7048992
DP	17053531
DW	17062432
EC	17081095
ED	17081878
EL	17082672

provided by http://www.crowleymarine.com