mercruiser STERN DRIVES & INBOARDS

# service bulletin

TO: SERVICE MANAGER ☐ TECHNICIANS ☐
PARTS MANAGER ☐

▲ = Revised November, 1995

**No. 93-14**

**NOTICE: The information contained in this Service Bulletin supercedes all previous bulletins.**

## Weber 4 Barrel Carburetor

### Adjustable Accelerator Pump

The accelerator pump lever has three holes in it. The closest hole to the lever's pivot point is the richest, the second hole is leaner and the hole farthest away is the leanest. All production carbs have the pump rod installed in the closest (richest) hole. If you are having a "rich" bog on acceleration, move the rod to the second or third hole. Weber put the three holes in the lever so the amount of fuel delivered by the accelerator pump could be changed.

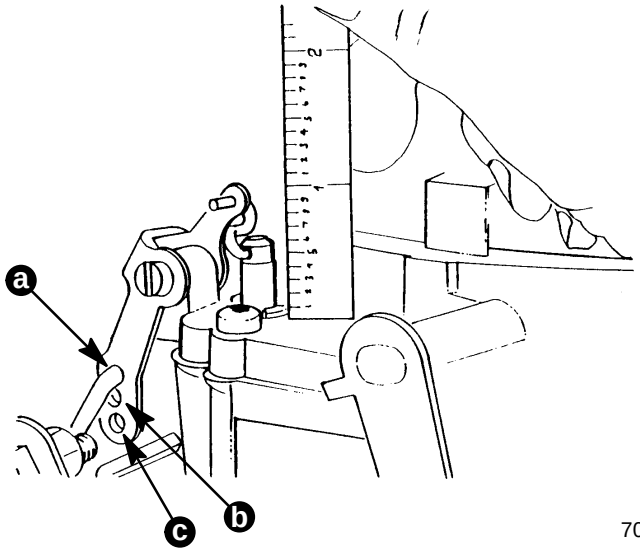


70472

a - Richest
b - Leaner
c - Leanest

### 4.3 LX Running Rich at Full Throttle

Serial Number: 0F004226 and Below

If you experience "surging" or a "rich pop" above 4000 RPM, change the secondary metering jets to .089 in. We have made this change to the carburetor that is used in production. Also, the parts lists for these carburetors only list the .089 in. jet.

(2) 823724 Jet, .089 in.



provided by http://www.crowleymarine.com

### 4.3 LX Flame Arrestor Stud Breakage

Serial Number: 0F001219 and Below

If you have a broken stud or the air horn of the carburetor is cracked, order the following parts to correct the problem. This failure was caused during the installation of the stud on our production line.

***NOTE:*** *The replacement stud will not thread in by hand because it has an interference thread on it. You will have to use a stud driver to install it.*

(1) 16-805277 Stud

(1) 3310-818660A1 - Replace only if air horn is cracked or you can't get the broken stud out.

### Automatic Choke Problem

If the engine runs rich for a long period of time after start-up or the choke takes a long time to come off, the automatic choke may be at fault. The failure to the choke is that the pin (that anchors the spring to the base) rotates in the base. This causes the choke "timing" to be off. Start a cold engine and watch the choke operation. If choke doesn't come off or comes off very slowly, the problem could be the choke. Refer to the engine's part list for correct replacement part number.

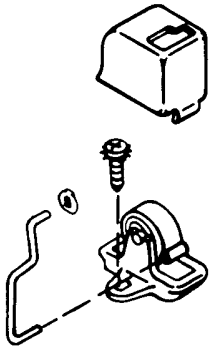

### Choke Pull-Off Specification Change For All V6 and V8 Engines

Whenever servicing one of these engines or if your customer is experiencing an overly rich running condition after first starting the engine, please reset the Choke Pull-Off to this new specification.

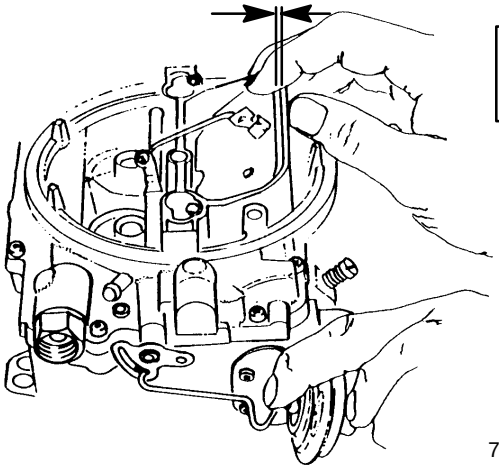

70471

V6 & V8 305, 350 cid: 3/16 in. (4.5 mm)
V8 454, 502 cid: 15/64 in. (6 mm)


provided by http://www.crowleymarine.com

**Hard Starting**

If you receive a complaint about a hard starting condition after engine sets for a week, do the following;

1. Before starting engine, remove flame arrestor then operate throttle to see if choke closes.
2. If choke is stuck open, check choke stove link rod and choke linkage on both sides of carburetor for cause of sticking. Could be paint or interference to rod or linkage.
3. If choke plate closes but doesn't close tight against the air horn, check the same areas outlined in "2".
4. If choke plate doesn't close tightly after "2 or 3", then order new choke link rod from that model engine's parts list. All Quicksilver s service stock is the new shorter link rod which will close the choke better.

**MCM/MIE 7.4L Main and Secondary Jet Change**

Serial Number: MCM Stern Drive Engine - 0F022828 and Below
MIE Inboard - 0D857999 and Below

***NOTE:*** *This does not affect MCM 454 Magnum engines.*

If you have a rich running engine at idle or one that surges above 4000 RPM or it has a backfire at 2400-2600 RPM, change the main and secondary jets. Engines above the serial numbers listed have the jets already changed to the new sizes.

(2) 811541 .107 in. Main Jets

(2) 811542 .098 in. Secondary Jets

***NOTE:*** *Before changing jets, make sure you don't have an automatic choke problem that is causing the rich idle condition.*

**Checking Accelerator Pump Adjustment**

Check the accelerator pump height, after you have made the idle mixture and RPM adjustments on a warmed up engine. If this isn't checked after the idle adjustments are made, the pump may not be getting its full stroke which could cause an acceleration "bog".

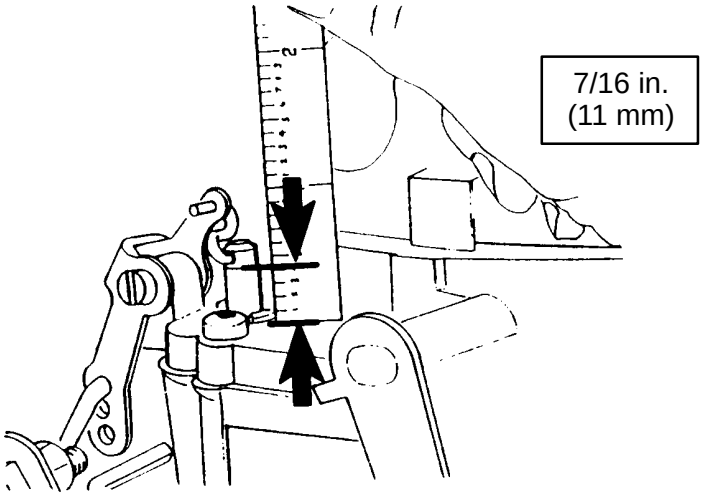



provided by http://www.crowleymarine.com

### Initial Setting For Idle Mixture Screws

The initial idle mixture screw setting for all Weber carburetors should be as shown below. All Service Manuals will be updated.

1-1/4 to 1-1/2 Turns Out From Seat

### ▲ Acceleration Bog

Watch the carburetor's pump jet housing nozzles while operating the throttle. Fuel should be coming out of both nozzles. If it isn't, there's the problem. The two most common reasons for this problem are, accelerator pump failure or a stuck check ball in the passage below pump jet housing.

Remove top half of the carburetor to inspect the accelerator pump. Repair as required. Remove the pump jet housing. Make sure the check ball, in the passage under the housing, is not stuck. If it is, use a pick to loosen ball up. Clean check ball and reassemble.

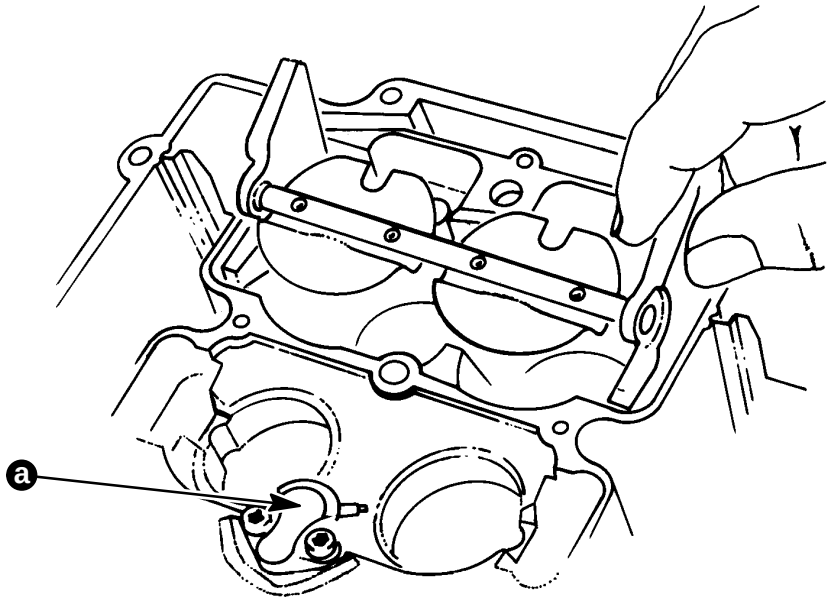


70459

a - Pump Jet Housing. Check Ball Is In Passage Under The Housing.

### Suggested Changes for Running at Altitude

For gear ratio changes, see Service Bulletin 93-7. The following is meant to be a guide when the engine is going to be used at altitudes other than sea level. If you are at sea level and your customer is going to a higher elevation for a short period of time, no changes to the gear ratio, timing or carburetor should be done. If your customer will be doing all their boating at higher altitudes, then changes can be done. If the boat is then brought back to sea level, everything has to be changed back for sea level use. Generally, timing can be advanced 2 degrees for every 5000 ft. (1525 m) elevation to help engine performance.

**⚠ CAUTION**

**To prevent engine damage, do not set timing any higher than for the lowest elevation that customer will be running the boat.**

Before ordering jets, look at the chart to try and determine the size of the stock secondary jets. We suggest that you look at the size stamped on the secondary jets in the carburetor that your working on before ordering jets.


provided by http://www.crowleymarine.com

**IMPORTANT: Change only the secondary jet.**

**MCM STERN DRIVE ENGINES**

| Model | Carburetor Part Number | 5000 ft. (1525 m) and Below | 5000-9000 ft. (1525-2745 m) | 9000 ft. (2745 m) and Above |
|---|---|---|---|---|
| 4.3LX<br>0F004225 and Below | 3310-818660A_ (9660) | .095 in. Stock Jet | .089 in. | .086 in. |
| 0F004226 and Above | 3310-818660A_ (9660) | .089 in. Stock Jets | .086 in. | .083 in. |
| 5.7L Alpha | 3310-805484A_ (9661) | .101 in. Stock Jets | .095 in. | .092 in. |
| | 3310-806761A_ (9665S) | .095 in. Stock Jets | .095 in. | .092 in. |
| 350 Mag and 5.7L Bravo | 3310-816343A_ (9770) | .092 in. Stock Jets | .086 in. | .083 in. |
| Electric Choke | 3310-806970A_ (9770SA) | .092 in. Stock Jets | .086 in. | .083 in. |
| 7.4L<br>0F022827 and Below | 3310-818659A_ (9772) | .098 in. Port Side<br>.077 in. Stbd. Side<br>Stock Jets | .092 in. Port Side<br>.074 in. Stbd. Side | .089 in. Port Side<br>.071 in. Stbd. Side |
| 0F022828 and Above | 3310-818659A_ (9772) | .098 in. Stock Jets | .092 in. | .089 in. |
| Electric Choke | 3310-806969A_ (9772SA) | Stock 3 Step Metering Rods | Elevation Kit No.1 | Elevation Kit No.1 |
| 7.4L Bravo Three | 3310-805569A_ (9777) | .098 in. Stock Jets | .092 in. | .089 in. |
| Electric Choke | 3310-806755A_ (9779S) | Stock 3 Step Metering Rods | Elevation Kit No.1 | Elevation Kit No.1 |
| 454 Magnum | 3310-816917A_ (9773) | .107 in. Stock Jets | .101 in. | .098 in. |
| Electric Choke | 3310-806755A_ (9779S) | Stock 3 Step Metering Rods | Elevation Kit No. 2 | Elevation Kit No. 2 |
| 502 Magnum | 3310-805341A_ (9776) | .101 in. Stock Jets | .095 in. | .092 in. |
| | 3310-806971A_ (9776SA) | .101 in. Stock Jets | .095 in. | .092 in. |


provided by http://www.crowleymarine.com

## MIE INBOARD AND SKI ENGINES

| Model | Carburetor Part Number | 5000 ft. (1525 m) and Below | 5000-9000 ft. (1525-2745 m) | 9000 ft. (2745 m) and Above |
|---|---|---|---|---|
| 5.7L and 5.7L Ski | 3310-805484A_ (9661) | .101 in. Stock Jets | .095 in. | .092 in. |
| | 3310-806761A_ (9665S) | .095 in. Stock Jets | .095 in. | .092 in. |
| 350 Mag Tour Ski | 3310-816343A_ (9770) | .092 in. Stock Jets | .086 in. | .083 in. |
| Electric Choke | 3310-806970A_ (9770SA) | .092 in. Stock Jets | .086 in. | .083 in. |
| 7.4L 0D857998 and Below | 3310-818659A_ (9772) | .098 in. Port Side .077 in. Stbd. Side Stock Jets | .092 in. Port Side .074 in. Stbd. Side | .089 in. Port Side .071 in. Stbd. Side |
| 0D857999 and Above | 3310-818659A_ (9772) | .098 in. Stock Jets | .092 in. | .089 in. |
| Electric Choke | 3310-806969A_ (9772SA) | Stock 3 Step Metering Rods | Elevation Kit No.1 | Elevation Kit No.1 |
| 8.2L | 3310-805341A_ (9776) | .101 in. Stock Jets | .095 in. | .092 in. |
| | 3310-806971A_ (9776SA) | .101 in. Stock Jets | .095 in. | .092 in. |

| Jet Size in. | Part Number |
|---|---|
| .071 | 823719 |
| .074 | 823720 |
| .077 | 811651 |
| .080 | 823721 |
| .083 | 823722 |
| .086 | 823723 |
| .089 | 823724 |
| .092 | 811657 |

| Jet Size in. | Part Number |
|---|---|
| .095 | 811832 |
| .098 | 811542 |
| .101 | 811650 |
| .104 | 811540 |
| .107 | 811541 |
| .110 | 823432 |
| .113 | 811649 |

| Elevation Kit No. | Part Number |
|---|---|
| 1 | 809615 |
| 2 (Note) | 809620 |

***NOTE:*** *Kit Number 2 is used on the MCM 454 Magnum only.*


provided by http://www.crowleymarine.com