service bulletin

TO: SERVICE MANAGER ☐ TECHNICIANS ☐
PARTS MANAGER ☐

No. 97-8

Revised June 1999. Information underlined is new.

MerCarb 2 bbl Carburetor

8 Point Carburetor Check List

To ensure that the carburetor is the cause of the engine's problem, make the following checks BEFORE ordering and installing a new carburetor. If questions 1, 2, 3, 5, 6 and 7 are YES and 8 is NO, the carburetor may not be the problem.

1.	Does the choke close completely (before starting)?	Y	N
2.	Does the choke open completely (during engine warm-up)?	Y	N
3.	Is idle mixture screw set correctly? (Engines with Thunderbolt V ignition must have module locked in base timing mode).	Y	N
4.	What is the idle mixture screw setting?		_____Turn.
5.	Is the engine idle speed (RPM) correct?	Y	N
6.	Is venturi cluster discharging fuel (by 2000 RPM)?	Y	N
7.	Is a good stream of fuel being discharged by both discharge holes in venturi cluster? (When throttle lever is 'pumped' with engine off).	Y	N
8.	Does the engine flood at idle?	Y	N

Adjusting Idle Mixture Screw

To adjust the idle mixture screw correctly, the throttle plates must be nearly closed. Please do the following:

NOTE: *Engines with Thunderbolt V ignition systems must have the ignition module put into 'base timing' mode before turning key to start the engine. After adjustments, shut engine off. Remove the module grounding wire, then restart the engine to take module out of 'base timing' mode.*

1. Disconnect throttle cable.
2. Set idle speed (RPM) screw so engine idles at 550-600 RPM in neutral gear.
3. Adjust idle mixture screw.
4. Reset the idle speed screw until engine idles at its recommended RPM.
5. Adjust and connect throttle cable.

provided by http://www.crowleymarine.com

MerCarb Float Setting

This is the float setting for all MerCarbs.

Needle/Seat	Float Level	Float Drop
Two Piece Solid:	3/8 in. (10 mm)	1-3/32 in. (27 mm)
Spring-Loaded (1):	9/16 in. (14 mm)	1-3/32 in. (27 mm)
(1) MCM, MIE 5.0L, 5.7L S/N 0L000001 and Above:		
	11/32 in. (9 mm)	15/16 in. (24 mm)

Flooding at Idle RPM

If you get an engine that is flooding at idle RPM, please check the following:

1. An ignition system problem causing the engine to run rough.
2. Idle mixture screw adjusted incorrectly.
3. Bad needle and seat.
4. Incorrect float level or drop.
5. On engines with a mechanical fuel pump, check fuel pressure at the carburetor. If fuel pressure is too high, check sight tube from the fuel pump to make sure it is not pinched or blocked.

If all these items have been checked, then check the type of needle and seat installed in the carburetor. Most older MerCarbs used a solid two-piece needle. If the carburetor has a solid two-piece needle and seat in it, install the spring loaded needle and seat kit. Reset float level to correct specifications.

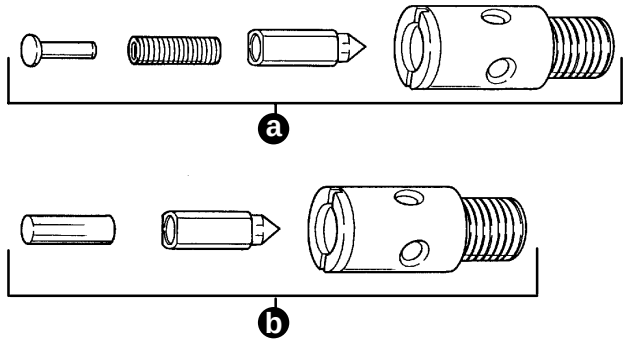

72290

a - Spring Loaded Needle and Seat.
b - Solid Two-Piece Needle and Seat.

Installing a spring loaded needle and seat kit on a 4-cylinder engine can cause a lean out condition in extremely hard turns.

GM 153, 181 cid: Right turn. Mercury Marine, 224 cid: Left turn.

Because of this potential lean out condition in extremely hard turns, you should make the boat owner aware of this condition before installing the spring loaded needle and seat kit. The spring loaded needle and seat kit is the preferred one to use if you have a flooding problem at idle RPM.

3302-9407 Solid Two Piece Needle and Seat Kit.

3302-9029 Spring Loaded Needle and Seat Kit.

provided by http://www.crowleymarine.com

MerCarb Flooding on 1990 and newer 3.0L, 3.0LX, Gen+V6 and Gen+V8 305/350 cid Models

This information applies only to the engines listed. If you get a complaint that the 2-bbl carburetor is flooding, do the following:

On the V6 and V8 engines with electric fuel pumps, make sure that the pump is not putting out too high of a fuel pressure. 10 psi (69 kPa) is the maximum pressure for these pumps. 30-40 psi (207-275 kPa) have been reported on some of these pumps. This high pressure is caused by a stuck check valve inside the fuel pump. The stuck check valve is caused by dispersant in today's fuel within the USA, see Service Bulletin 98-5. To free this check valve up, plug the carburetor end of the fuel line with a Tee fitting. Install a 60 psi (414 kPa) guage to the other port in the Tee fitting. Run the pump to 'dead head' it against the plugged Tee fitting. When the pressure drops to about 8 psi (55 kPa), the check valve has been freed up.

On all engines, check the carburetor to make sure that it is not causing the flooding condition.

If neither of these problems are causing the flooding, order the 2.5 mm Needle and Seat Kit from Quicksilver. The original needle and seat in the carb has a 3.0 mm ID hole in the seat. The 2.5 mm hole in the new seat gives the needle more area to seat against and allows less pressure through it.

3302-804689 Needle and Seat Kit - 2.5 mm

The Air Horn Gasket for the MerCarb is now sold by itself.

3302-804695 Air Horn Gasket for the MerCarb.

Electric Choke Operation, V8 Engines S/N 0F601000-0L000000

On these engines, a PUR/YEL wire connects the electric choke to a terminal on the alternator. The terminal on the alternator will not put out enough voltage to open the choke until the engine exceeds 800 RPM. If an engine is started and left to idle below 800 RPM, the choke may not open. This can cause a rich running condition. Whenever troubleshooting a choke opening problem on one of these engines, make sure that the engine RPM exceeds 800 when first starting.

Tell your customers to exceed 800 RPM for a short time after starting their engine. This will allow the alternator to start charging.

Setting the Electric Choke

When servicing an engine, the choke should be reset to specifications as listed below. Add these choke specifications to all your older service manuals. The old setting were too rich for most engines. Production carburetors on new engines are set at these settings. If needed, the choke can be set slightly richer or leaner to customize it for the operating conditions that the engine will be run in.

3.0L: 1 Index Mark Clockwise.

V6, V8: 2 Index Marks Clockwise.

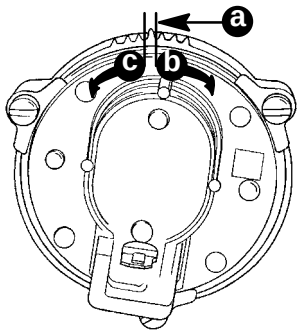

72403

a - Timing Mark in Cover is Shown In Line With Center Index Mark.
b - Clockwise = Leaner.
c - Counterclockwise = Richer.

provided by http://www.crowleymarine.com

MCM 4.3L 'Surge' or 'Popping' Condition above 4000 RPM, S/N 0F114600 and Below

If a customer is having this condition, install 1.60 mm main jets;

3302-810923 1.60 mm Main Jets, 2 required.

MCM 4.3L 'Surge' at 3000-4000 RPM, S/N 0F293967 and Below

If a boat owner has this condition and the engine serial number is below the one listed, change the venturi cluster. Usually, this cluster change will correct the problem. This is the same cluster that was used in MerCarbs on newer MCM 5.0L.

MCM 4.3L engines above the serial number given above, used a recalibrated carburetor. The part number for these carburetors was either P/N 3310-806972A 1 or 3310-807764A 1. These carburetors will also correct the condition. DO NOT USE the venturi clusters from either of these carburetors in an older 4.3L carburetor. These venturi clusters have 'distribution tabs' on them and could cause the engine to run too 'lean'.

3302-808706 Venturi Cluster ('463' from a 5.0L carburetor).

MCM 5.0L Running Rich at Idle or Just Above Idle, S/N 0F118346 and Below

If you have a 5.0L engine below the serial number listed, and it has this problem, change the venturi cluster. Engines above the serial number listed used a carburetor that had the new venturi cluster. The idle circuit in this new cluster is leaner than the previous cluster.

NOTE: *This new cluster may give a lean pop on rapid acceleration with no load on the prop. Retest the boat in the water with the correct pitch propeller before trying to correct a problem that really is not there.*

3302-808706 Venturi Cluster.

Venturi Cluster Identification

The venturi clusters are matched to the carburetor. Sometimes the replacement clusters get packaged wrong. Clusters have an identifying number on them. Refer to the service manual for the engine that you are working on for the correct cluster number.

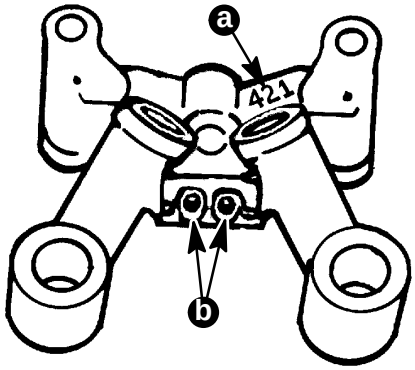

72779

a - Identification Number
b - Accelerator Pump Discharge Holes

provided by http://www.crowleymarine.com

Adjustable Accelerator Pump

The replacement accelerator pump lever has three holes in it. This lever will allow you to change the amount of fuel delivered to the engine by the accelerator pump. Most bogging problems can be corrected by changing the rod's location, providing the bogging problem is being caused by the carburetor. Always test run the boat in the water to see if bog has been corrected.

When installing this lever on an older carburetor, put the rod in the center hole. This will give 0.5 cc less fuel to the engine on acceleration, than the single hole lever did. Remove any metal ball that someone may have put in the accelerator pump well to limit pump travel. Also, make sure that the duration spring on the accelerator pump is stock and has not had several coils cut off. Verify that the venturi cluster is the correct one as called for in service manual. Production started using carburetors with the 3 hole lever in June 1992.

3302-823725 Lever (With 3 Holes)

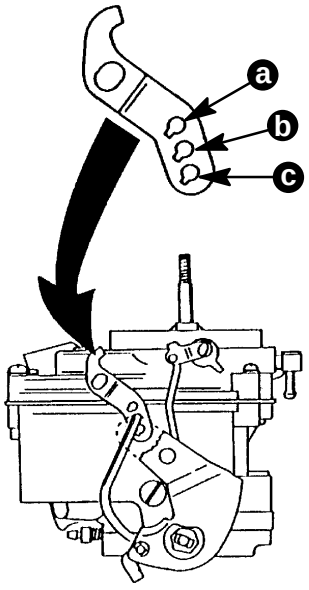

73131

a - Full Accelerator Pump Stroke.
b - 0.5 cc Less Fuel Per Stroke (Leaner).
c - 1.0 cc Less Fuel Per Stroke (Leanest).

Suggested Changes for Running at Altitude

The following is meant to be a guide when the engine is going to be used at altitudes other than sea level.

1. Boats going to a higher elevation for a short period of time should only change their propeller to a lower pitch.
2. Customers that will be doing all their boating at higher altitudes can have the following changes made. If this boat is brought back down to sea level, all elevation changes that were made must be returned to settings for sea level.

⚠ CAUTION

To prevent engine damage, DO NOT SET timing any higher than for the lowest elevation that customer will be running the boat.

3. Generally, timing can be advanced 2 degrees for every 5000 ft. (1525 m) elevation to help engine performance.
4. Carburetors can be leaned out to help performance at higher elevations. Before ordering any parts, look at the part number on the carburetor. It is stamped in the float bowl.

provided by http://www.crowleymarine.com

Part numbers that have 6 digits will only have the last 5 digits stamped in the float bowl. 815397A 4 will be 15397A 4. Also, look at the main jet to see what size it is. A '165' stamped on it would mean that it is a 1.65 mm jet.

For gear ratio changes, see Service Bulletin 97-10.

Jet Size	Part Number
1.30	3302-811849
1.35	3302-811850
1.40	3302-811851
1.45	3302-9050
1.50	3302-811852
1.55	3302-811853
1.60	3302-810923

Jet Size	Part Number
1.65	3302-9058
1.70	3302-9055
1.75	3302-811854
1.80	3302-811855
1.85	3302-811856
1.90	3302-811857

Power Valve	Part Number
0.74	3302-9435
0.90	3302-9059

Models	Carburetor Part Number	5000 ft. (1525 m) and Below	5000-9000 ft. (1525-2745 m)	9000 ft. (2745 m) and Above
2.5L/3.0L S/N 0C856400 and Below	1389-9562A_ 3310-806077A_ 3310-860070A_	1.45 mm #	1.40 mm	1.35 mm
3.0L S/N 0C856451-0F353099	1389-815396A_ 3310-806078A_	1.60 mm #	1.50 mm	1.45 mm
3.0L S/N 0L000001 and Above	3310-807504A_	1.55 mm #	1.55 mm #	1.45 mm
3.0LX	1389-815397A_ 3310-805924A_ 3310-807504A_	1.65 mm # 1.60 mm # 1.55 mm #	1.55 mm 1.50 mm 1.55 mm #	1.50 mm 1.45 mm 1.45 mm
4.3L, 4.3LX	1389-9565A4	1.65 mm #	1.55 mm	1.50 mm
	1389-9565A_ 3310-806080A_ 3310-806972A__	1.60 mm #	1.50 mm	1.45 mm
	3310-807764A	1.60 mm # 1.55 mm #	1.50 mm 1.55 mm #	1.45 mm 1.45 mm
5.0L	1389-9563A_ 3310-806081A_ 3310-861080A_	1.70 mm #	1.60 mm	1.55 mm
	1389-9670A_ 3310-806082A_	1.85 mm #	1.75 mm	1.65 mm
	3310-861448A_	1.65 mm #	1.50 mm	1.45 mm
5.7L (1)	3310-807312A_ 3310-861245A_	1.65 mm # 0.90 mm #	1.50 mm 0.90 mm #	1.45 mm 0.74 mm

(1) = Refer to the sizes given for the main jet and the power valve on these carburetors.
= Stock Jet.

provided by http://www.crowleymarine.com