mercruiser
STERN DRIVES & INBOARDS

service bulletin

TO: SERVICE MANAGER ☐ MECHANICS ☐
PARTS MANAGER ☐

No. 93-12

OFFICIAL NOTIFICATION UNDER THE U.S. FEDERAL BOAT SAFETY ACT

A. REQUIRED FUEL INLET FITTING REPLACEMENT ON WEBER CARBURETOR

Models

MCM 4.3LX Stern Drive Engines – Serial Number: 0F016929-0F023009

MCM 5.7L Alpha Stern Drive Engines – Serial Number: 0F016784-0F022828

MCM 5.7L Bravo Stern Drive Engines – Serial Number: 0F018527-0F022418

MCM 350 Magnum Stern Drive Engines – Serial Number: 0F016766-0F022406

MIE 5.7L SKI Engines – Serial Number: 0F025368-0F025496

MIE 350 Mag Tour SKI Engines – Serial Number: 0D853929-0D854330

MIE 5.7L Inboard Engines – Serial Number: 0F025521-0F025643

NOTE: This does not effect MCM 5.0LX, 7.4L, 454 Mag, 502 Mag Stern Drive Engines or MIE 7.4L, 8.2L Inboard Engines.

Situation

The fuel line sealing surface in the Fuel Inlet Fitting may be damaged which could cause a fuel leak. This damage occurred when the threads were put in this fitting during manufacturing.

provided by http://www.crowleymarine.com

Correction

1. Remove fuel line, then remove inlet fitting.

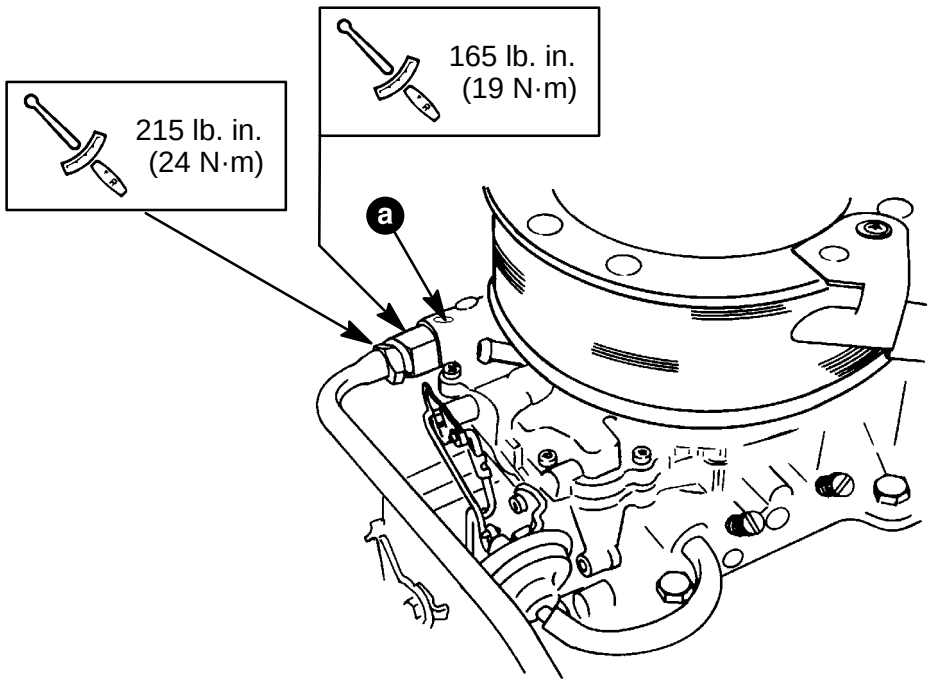

71956

a - Identify with Dot of White Paint

2. Install new inlet fitting. Torque to 165 lb. in. (19 N·m).
3. Install fuel line. HOLD INLET FITTING WITH WRENCH. Torque fuel line nut to 215 lb. in. (24 N·m).
4. Supply cooling water to the engine. Start engine and check for fuel leaks.
5. Using white paint and a small pointed brush, apply a white dot to the carburetor at location shown. This will tell other technicians that the fitting has already been changed.

⚠ WARNING

MAKE SURE NO FUEL LEAKS EXIST BEFORE CLOSING ENGINE HATCH.

Parts Required

(1) 811533 Inlet Fitting

Warranty

Fill out warranty claim (or campaign card) and send to your normal warranty processing center. More than one engine can be put on a warranty claim if you list the part number, engine model, serial number and labor hours for each engine on separate lines on warranty claim.

Warranty Code: MF12

Labor: 1.0 Hours

Old Parts: Scrap

provided by http://www.crowleymarine.com

MERCURY MARINE

MERCURY MARINE
A BRUNSWICK COMPANY
FOND DU LAC, WISCONSIN 54935

CAMPAIGN CLAIM

Printed in U.S.A. SIS-1008

TE 10427

CAMPAIGN NO.	DEALER REPAIR NO.	DATE OF REPAIR	HOURS PRODUCT OPER.	DATE RECEIVED	ALLOW HRS.

PARTS ALLOWANCE WILL BE CALCULATED AT TIME OF CREDIT.

PLEASE PRESENT THIS FORM WITH YOUR DESCRIBED PRODUCT TO YOUR AUTHORIZED DEALER AS SPECIFIED IN YOUR LETTER IN ORDER TO OBTAIN THE REQUIRED SERVICE.

THE UNDERSIGNED DEALER HEREBY CERTIFIES THAT HE PERFORMED THE INDICATED WORK IN ACCORDANCE WITH THE SERVICE MANUAL AND APPLICABLE SERVICE BULLETIN AND HEREBY APPLIES FOR CREDIT ALLOWED ON THE INFORMATION SHOWN THEREIN.

Use Dealer Identification Plate - Imprint Here

TO

CUSTOMER SIGNATURE HERE INDICATES COMPLETION OF REPAIRS BY DEALER	DEALER SIGNATURE

provided by http://www.crowleymarine.com

Notice of Recall Pursuant to Federal Boat Safety Act

Dear MerCruiser Customer:

Our records indicate that you are the owner of a boat powered by a MerCruiser engine package. Your engine has been indentified as one of those that may have been built with a defective fuel inlet fitting on the carburetor and is being recalled under the Federal Boat Safety Act.

We have discovered that there may be a poor seal between the stainless steel fuel line and the brass fuel inlet fitting. The poor seal may result in a fuel leak, creating the potential for a fire or explosion if a spark or other ignition source is present. Mercury Marine has developed this recall program to eliminate any risk or concern.

The fuel fitting will be replaced without any charge to you. Mercury Marine apologizes for this inconvenience. We take this action in the interest of safety and your continued satisfaction with our product.

Please check with the dealer from whom you purchased the boat. The dealer may have already replaced the fuel fitting per Service Bulletin 93-12. If the fitting has not already been replaced, there is no need for you to stop using your boat. Inspect the area where the fuel line is threaded into the fuel fitting (see diagram below). If no fuel leaks are present it is OK to use your boat. Inspect the fitting for leaks regularly and have the repairs done as soon as it is convenient. Make sure to always use your bilge blower and follow the starting instructions in your Owners Operation and Maintenance Manual.

IF THERE IS ANY EVIDENCE OF FUEL LEAKING, DO NOT USE YOUR BOAT. CALL YOUR MERCRUISER DEALER AND DELIVER YOUR BOAT AND CAMPAIGN CARD ENCLOSED WITH THIS LETTER TO THE DEALER AND HAVE THE REPAIR DONE BEFORE YOU USE YOUR BOAT AGAIN.

If you have sold your boat, please advise us of the new owners name and address and return this letter and campaign card to us so we can contact the new owner about this important matter.

Sincerely,

Larry Engelbert
National Service Manager - MerCruiser

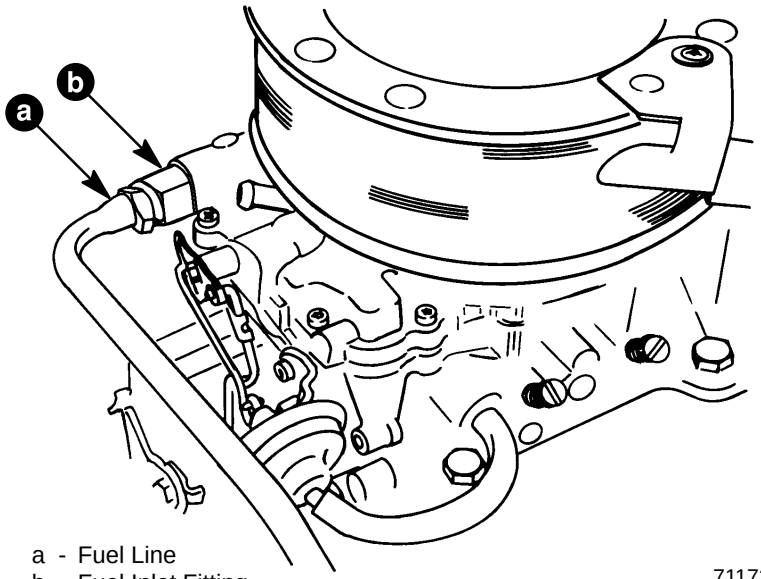

a - Fuel Line
b - Fuel Inlet Fitting

71173

provided by http://www.crowleymarine.com