mercruiser
STERN DRIVES & INBOARDS

service bulletin

TO: SERVICE MANAGER ☐ MECHANICS ☐
PARTS MANAGER ☐

No. 93-11

A. REQUIRED STARBOARD ENGINE MOUNT BOLT REPLACEMENT

Models

All MCM V6 and V8 Stern Drive Engines
Serial Number: 0F020958-0F024051

NOTE: This does not effect MIE Inboard or Ski Engines.

Problem

All V6 engines have the wrong length bolts holding the starboard (right) mount to the cylinder block. All 3 bolts are the wrong length.
All V8 engines have the wrong length lower bolt holding the starboard (right) mount to the cylinder block. The top two are the correct length.

Correction

Notice: Before changing the bolts, look at the color of the bolt head. If it is gold in color, bolt has already been changed at the factory and does not have to be changed.

By replacing one bolt at a time, you won't have to support front of engine. See Figure 1 or 2 for correct bolt replacement.

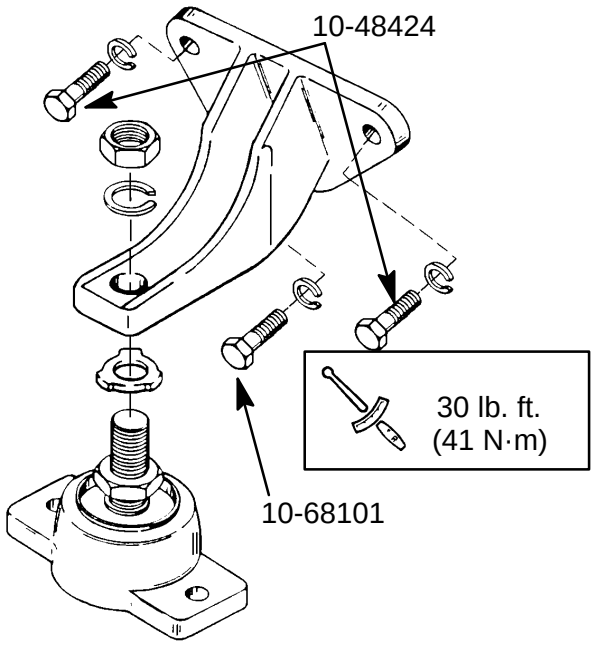

Figure 1. V6 Engines

provided by http://www.crowleymarine.com

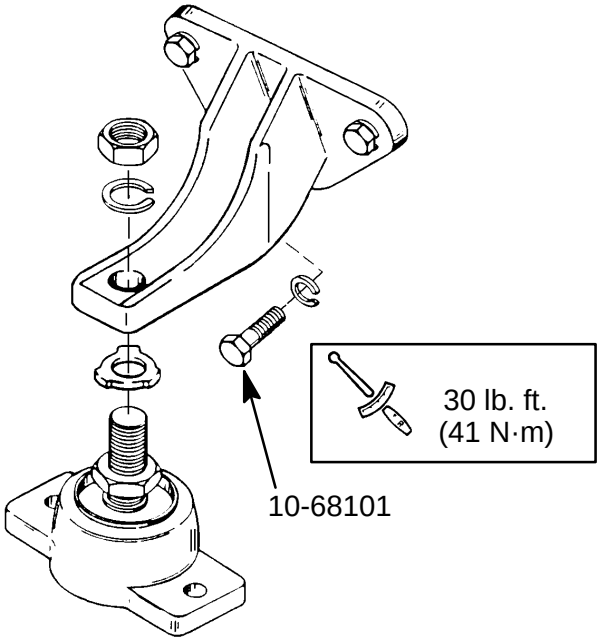

Figure 2. V8 Engines

Parts Required

V6 Engine: (1) 10-68101 Lower Bolt
(2) 10-48424 Upper Bolts

V8 Engine: (1) 10-68101 Lower Bolt

All Engines: Loctite 271- Applied to bolt threads before installing.

Warranty

Fill out warranty claim and send to your normal warranty processing center. More than one engine can be put on a warranty claim if you list the part number, engine model, serial number and labor hours for each engine on separate lines on warranty claim.

Warranty Code: MM56

Labor: 1.0 Hours

Old Parts: Scrap

provided by http://www.crowleymarine.com