mercruiser
STERN DRIVES & INBOARDS

service bulletin

TO: SERVICE MANAGER ☐ MECHANICS ☐
PARTS MANAGER ☐

No. 93-5

A. REQUIRED FUEL PUMP PUSH ROD REPLACEMENT

Model

MCM 5.7L Bravo Stern Drive Engine Only
Serial Number: 0F009141-0F014479

NOTE: Does not effect MCM 5.7L Alpha Stern Drive, MIE 5.7L Inboard or MIE 5.7L Ski Engines.

Problem

This engine has a steel camshaft in it and it takes a different fuel pump push rod than engines with the cast camshaft. During assembly, the wrong push rod was installed. This wrong push rod can cause premature camshaft fuel pump lobe and/or push rod wear.

Correction

The two push rods look alike. Please order the correct push rod by part number and install it in the engine.

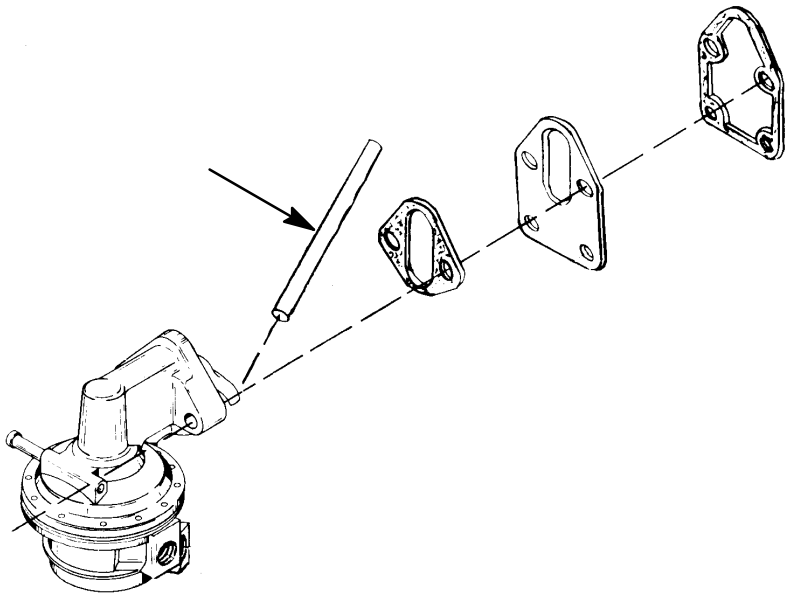

Parts Required

(1) 821150 Push Rod
(1) 27-34213 Fuel Pump Gasket
(1) 27-34898 Mounting Plate Gasket

Warranty

Fill out warranty claim and send it to your normal warranty processing center.

Warranty Code: MF16

Labor: 1.5 Hours

Old Part: Scrap

provided by http://www.crowleymarine.com