service bulletin

TO: SERVICE MANAGER ☐ MECHANICS ☐
PARTS MANAGER ☐

No. 93-3

FIELD FIX NOTIFICATION

A. UNIVERSAL JOINT CROSS & BEARING CUP SEAL

Models

Bravo One and Two

Problem

The cup seal on the cross & bearing assembly may be made of the wrong material. When the seal comes in contact with grease, it swells and distorts as shown in the art work following, letter (b) represents the bad seal and letter (a) represents the good seal in appearance. There is a possibility of one or more bad seals on a unit, and not all units will have a bad seal. The serial numbered units listed on the following sheet need to be inspected for this problem defect. Although these defective seals present no danger for the owner or any passengers, their failure could result in premature failure of the universal joint.

Correction

To correct the problem, remove the drive and inspect the universal joint assembly. Replace any cross & bearing assembly that has a defective seal with a new cross & bearing assembly, part number **75832A3**. Return the defective cross assembly that has the bad seal along with a warranty claim to your normal warranty processing location to receive credit.

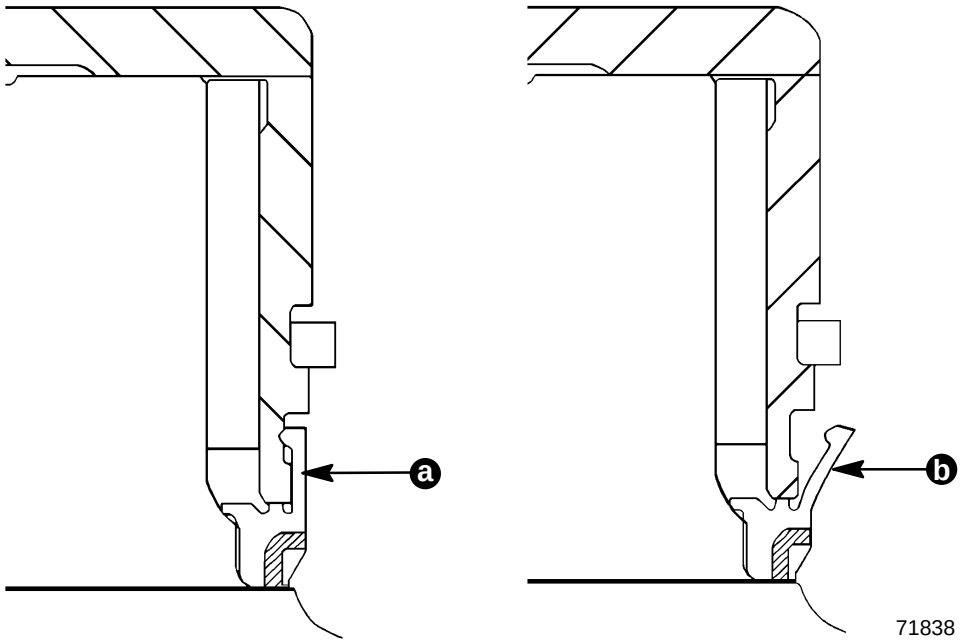

a - good seal
b - seal defect

provided by http://www.crowleymarine.com

Warranty Code

Fill out a warranty claim using the following codes
Labor Code To Inspect: MD28 @ 1.5hrs.
Labor Code To Repair: MD29 @ 2.5hrs.
and send it to :

Send the claim and the cross and bearing assembly or assemblies containing the bad seals to your normal processing location.

TYPE	SERIAL NUMBER RANGE
BRAVO ONE & TWO	0D791415 thru 0D791495
	0D799850 thru 0D799905
	0D791204 thru 0D791328
	0D783784 thru 0D783788
	0D783738 thru 0D783773
	0D798857 thru 0D799299
	0D782988 thru OD783038
	0D798807 thru 0D798848

provided by http://www.crowleymarine.com

Dear MerCruiser Customer:

Our records indicate that you are the owner of a boat powered by a MerCruiser engine/stern drive package. Your stern drive has been identified as being in a group of drives that may have been built with defective seals on the universal joint cross and bearing assemblies.

Although these defective seals present no danger for you or your passengers, their failure could result in premature failure of the universal joint.

In order to determine if your universal joint was assembled with defective seals, the stern drive unit will have to be removed from the boat and the seals inspected. Your MerCruiser dealer has been notified about this situation by way of MerCruiser Service Bulletin 93-3. To have this inspection done please take the following steps.

1. Call your authorized MerCruiser Dealer to make an appointment for the inspection. The inspection can usually be accomplished in one hour or less.

2. Deliver your boat and the pre-printed warranty claim included with this letter to your MerCruiser Dealer to have the seals inspected. If either of the universal joint cross and bearing assemblies have a defective seal, the assembly containing the defective seal will be replaced. If replacement of cross and bearing is required, the job will take approximately 3 hours.

It is not necessary to stop using your boat pending this inspection. A good opportunity to have this inspection done is when you take your boat in for winterization or for an end of season inspection.

The inspection and/or replacement of the cross and bearing assemblies will be done without any charge to you. Mercury Marine apologizes for this inconvenience. We take this action in the interest of customer satisfaction and our commitment to the marine industry.

If you have sold your boat, please return this letter and warranty claim to us with the new owner’s name and complete address so we can contact the new owner about this matter.

Sincerely,

Larry Engelbert
National Service Manager - MerCruiser

provided by http://www.crowleymarine.com