mercruiser
STERN DRIVES & INBOARDS

service bulletin

TO: SERVICE MANAGER ☐ MECHANICS ☐
PARTS MANAGER ☐

No. 92-18

A. WEBER CARBURETOR ADJUSTABLE ACCELERATOR PUMP

Models

All V6/V8 Engines with Weber Carburetors

Adjustable Accelerator Pump

The accelerator pump lever has three holes in it. The closest hole to the lever's pivot point is the richest, the second hole is leaner and the hole farthest away is the leanest. All production carbs have the pump rod installed in the closest (richest) hole. If you are having a "rich" bog on acceleration, move the rod to the second or third hole. Weber put the three holes in the lever so the amount of fuel delivered by the accelerator pump could be changed.

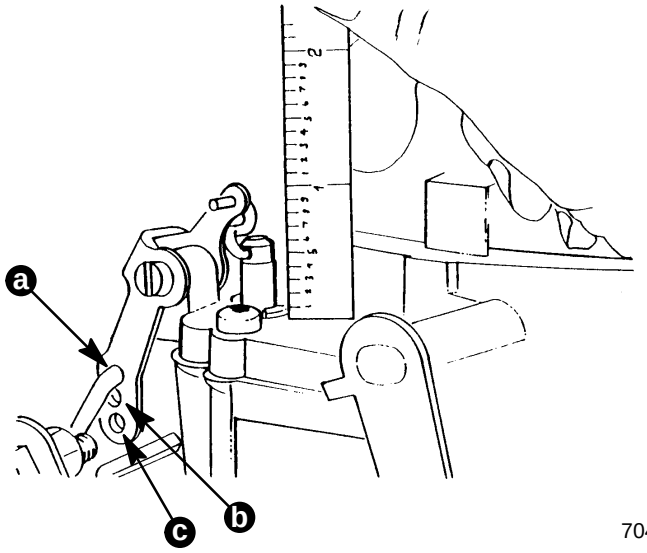

70472

a - Richest
b - Leaner
c - Leanest

provided by http://www.crowleymarine.com