service bulletin

TO: SERVICE MANAGER ☐ MECHANICS ☐
PARTS MANAGER ☐

No. 91-9

▲Revised 4-14-93

A. OIL LEAKING FROM WATER PICKUP HOLES IN GEAR HOUSING ON ALPHA ONE GENERATION II DRIVE

Models

MCM 3.0L/3.0LX/4.3L/4.3LX/5.0L/5.0LX/5.7L Alpha/350 Magnum

Changes

The oil seal carrier is being changed from the brown color (aluminum) material back to a black glass filled nylon material. This new seal carrier will supercede the aluminum version. The new seal carrier can be identified by looking at the base where the old plastic carrier had only two support feet the new one will have four support feet.

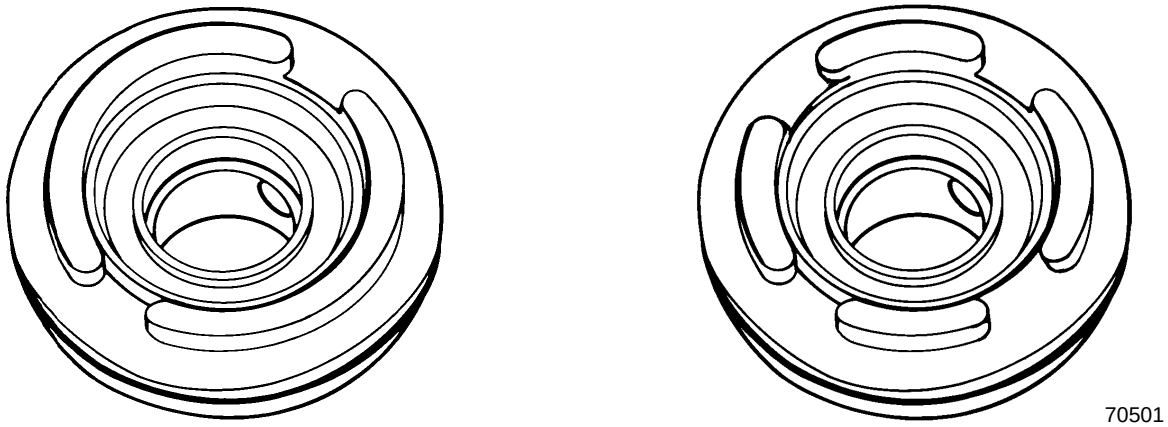

70501

A. Old Style **B. New Style**

Problem

If oil is detected leaking from the water pickup holes in the gear housing, the oil seal carrier under the water pump face plate may be cracked. This would cause oil to leak from the water pickup holes in the gear housing and could lead to gear failure.

Parts Required

1 seal carrier ▲821759A2

provided by http://www.crowleymarine.com

Repair

Remove cracked carrier from gear housing using a couple of screw drivers to lift it up and out of the housing bore.

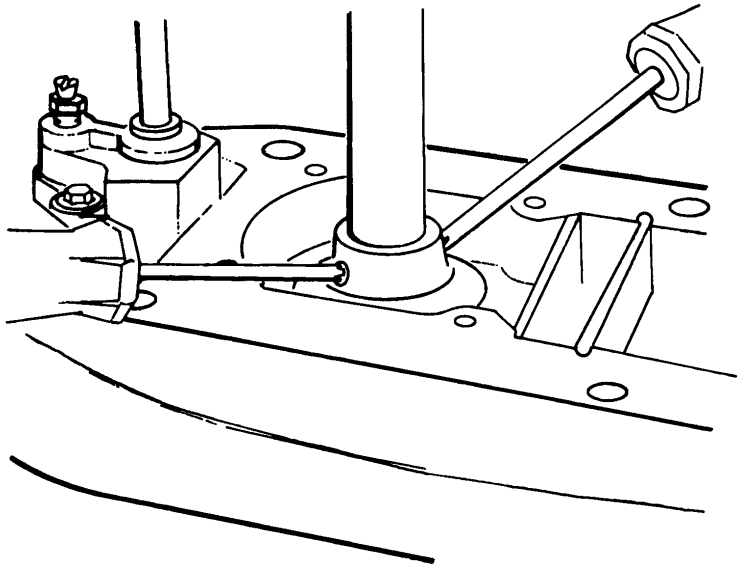

70489

Warranty

Fill out a warranty claim and send to your normal warranty processing center.

Labor code: MD27

Labor: 3.50

provided by http://www.crowleymarine.com