mercruiser STERN DRIVES & INBOARDS

service bulletin

TO: SERVICE MANAGER ☐ MECHANICS ☐
PARTS MANAGER ☐

No. 91-8

MCM 350 Magnum Alpha, MCM 5.7L Bravo, MIE 350 Magnum Tournament Ski Inboard Specifications

NOTE: These three engines have a steel camshaft and roller lifters.

A. Tune-up Specifications
B. Electrical Specifications
C. Carburetor Specifications
D. Internal Engine Specifications
E. Torque Specifications
F. Wiring Diagram (Engine)
G. Water Flow Diagram

A. TUNE-UP SPECIFICATIONS

Model	350 Magnum 5.7L Bravo	350 MTS Inboard
Propshaft Horsepower (Kilowatts)	250 (186)	265 (197)
Displacement	350 CID (5.7L)	
Engine Type and Number of Cylinders	V8	
Bore	4.00 in. (101.6mm)	
Stroke	3.48 in. (88.39mm)	
Compression Ratio	9.3:1	
Compression Pressure	150 psi (1035 kPa)	
Ignition	Thunderbolt IV HEI	
Spark Plug Type	AC-MR43T or Champion RV8C	
Spark Plug Gap	.035 in. (0.9mm)	
Timing at Idle RPM	8° BTDC	
Maximum RPM at Wide-Open-Throttle	4400-4800	
Idle RPM in Forward Gear	650-700	
Firing Order	1-8-4-3-6-5-7-2	
Fuel Required	87 Octane Minimum (Average Octane Rating)	

Model	350 Magnum 5.7L Bravo	350 MTS Inboard
Fuel Pump Pressure	3-7 psi (21-48 kPa)	
Electrical System	12V Negative (-) Ground	
Alternator Rating	55 Amps	
Minimum Battery Rating Required	375 CCA or 90 Ah	
Crankcase Oil Capacity with New Filter*	Approx. 5 U.S. Qts. (4.7L)	
Oil Pressure at 2000 RPM	30-60 psi (207-414 kPa)	
Minimum Oil Pressure @ Idle	4 psi (28 kPa)	
Valve Lash	1 Turn Down from Zero Lash	
Thermostat	143° F (62° C)	
Cooling System Capacity	15 U.S. Qts. (14.2L)	
Closed Cooling System Capacity	20 U.S. Qts. (18.9L)	
Alpha Stern Drive Oil Capacity (Approx.)	39 Fl. Oz. (1160 ml)	
Bravo Stern Drive Oil Capacity (Approx.)	3.2 U.S. Qts. (3.03 L)	
Transmission* (Borg Warner) 1:1	2 U.S. Qts. (1.9L)	
Transmission* (Borg-Warner) 1.5:1	3 U.S. Qts. (2.8L)	

*Approximately, ALWAYS use dipstick to determine exact quantity of oil required.

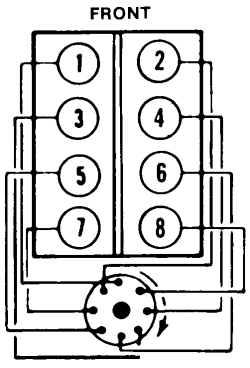

Firing Order
1-8-4-3-6-5-7-2

Figure 1. L.H. Rotation

provided by http://www.crowleymarine.com

B. ELECTRICAL SPECIFICATIONS

Coil Specifications

Coil	Part No. 392-7803A4
Coil Primary Resistance (Ohms) Minimum	.60
Coil Primary Resistance (Ohms) Maximum	.80
Coil Secondary Resistance (Ohms)	9.400-11.700

Starter Motor Specifications

Part Number (Delco-Remy Number)	No Load Test					Brush Spring Tension
	Volts	Min. Amps.	Max. Amps.	Min. RPM	Max. RPM	
350 MTS 50-812428A_ (9000762) 50-812604A_ (9000768)	10.6	60	90	3,000	3,300	83-104 oz. (2353-2948 g)

IGNTION MODULE SPECIFICATIONS

Part Number: 821125 A1
Identification Mark: V8 24S
Module Advance: 24°
Initial Timing: 8° BTDC
Total Advance: 31° @ 4400 RPM

Advance Curve

IMPORTANT: Advance curve chart does not include initial engine timing. Initial engine timing must be added to curve for total advance curve.

MCM 350 Magnum Alpha, MCM 5.7L Bravo, MIE 350 MTS

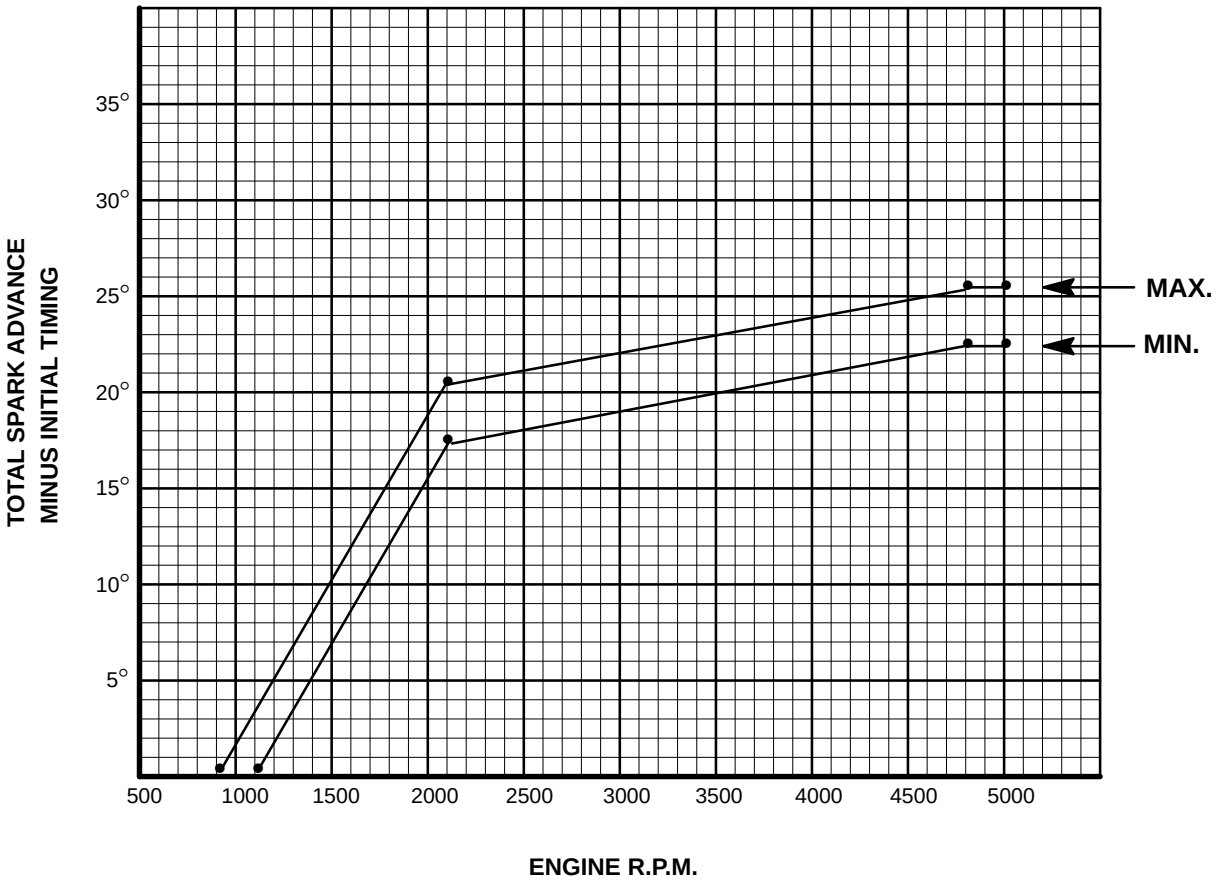

70808-1

provided by http://www.crowleymarine.com

C. CARBURETOR SPECIFICATIONS

All measurements are ± 1/64 in. (0.4mm).

Model 350 Magnum/5.7L Bravo/350 MTS Inboard

Part Number (Weber)	3310-816343A1 (9770)
Float Drop	2 in. (51mm)
Float Level	1-9/32 in. (33mm)
Pump Rod Hole Location	#3 from End
Accelerator Pump	7/16 in. (11mm) NOTE:1
Choke Pull Off	1/8 in. (3.3mm)
Choke Coil Rod	Top of Rod to be Even with Bottom of Lever Hole (NOTE:2)
Primary Jet —Throttle Lever Side —Choke Rod Side	 .101 in. .101 in.
Metering Rod (Number)	16-6852
Secondary Jet	.092 in.
Idle Mixture Screw (Preliminary)	2 Turns

NOTE 1: Measured from Top of Carburetor to the bottom of “S” link.

NOTE: 2 Remove choke rod from lever hole. Choke held closed and choke rod pushed down next to lever.

D. INTERNAL ENGINE SPECIFICATIONS

UNIT OF MEASUREMENT in. (mm)

Cylinder Bore:

Model			**350 Magnum 5.7L Bravo**	**350 MTS Inboard**
Diameter			3.9995-4.0025 (101.5873-101.6635)	
Out of Round	Production		.001 (0.025) Max.	
	Service		.002 (0.05) Max.	
Taper	Production	Thrust Side	.0005 (0.0127) Max.	
		Relief Side	.001 (0.025) Max.	
	Service		.001 (0.02)Max.	

Piston:

Clearance	Production	.0007-.0017 (0.0178-0.0431)
	Service	.0027 (0.07) Max.

Piston Ring: (1)HI Production Limit

Compression	Groove Side Clearance	Production	Top	.0012-.0032 (0.0305-0.0813)
			2nd	.0012-.0032 (0.0305-0.0813)
		Service		(1) + .001 (0.02)
	Gap	Production	Top	.010-.020 (0.254-0.508)
			2nd	.010-.025 (0.254-0.635)
		Service		(1) + .010 (0.25)
Oil	Groove Side Clearance	Production		.002-.007 (0.050-0.177)
		Service		(1) + .001 (0.02)
	Gap	Production		.015-.055 (0.381-1.397)
		Service		(1) + .010 (0.25)

Piston Pin:

Diameter		.9270-.9273 (23.5458-23.5534)
Clearance	Production	.00025-.00035 (0.00635-0.00889)
	Service	.001 (0.02) Max.
Fit in Rod		.0008-.0016 (0.0203-0.0406) Interference

provided by http://www.crowleymarine.com

Crankshaft:

Main Journal	Diameter	No. 1	2.4484-2.4493 (62.1894-62.2122)
		No. 2 3 4	2.4481-2.4490 (62.1817-62.2046)
		No. 5	2.4479-2.4488 (62.1767-62.1995)
	Taper	Production	.0002 (0.005) Max.
		Service	.001 (0.02) Max.
	Out of Round	Production	.0002 (0.005) Max.
		Service	.001 (0.02) Max.
Main Bearing Clearance	Production	No. 1	.0008-.0020 (0.0203-0.0508)
		No. 2 3 4	.0011-.0023 (0.0279-0.0584)
		No. 5	.0017-.0032 (0.0432-0.0813)
	Service	No. 1	.001-.0015 (0.03)
		No. 2 3 4	.001-.0025 (0.03-0.06)
		No. 5	.0025-.0035 (0.07-0.08)
Crankshaft End Play			.002-.006 (0.05-0.15)
Connecting Rod Journal	Diameter		2.0988-2.0998 (53.3095-53.3349)
	Taper	Production	.0005 (0.0127) Max.
		Service	.001 (0.02) Max.
	Out of Round	Production	.0005 (0.0127) Max.
		Service	.001 (0.02) Max.
Rod Bearing Clearance		Production	.0013-.0035 (0.0330-0.0889)
		Service	.003 (0.07) Max.
Rod Side Clearance			.008-.014 (0.20-0.35)
Crankshaft Runout			.0015 (0.0381) Max.

Camshaft and Drive:

Model		350 Magnum 5.7L Bravo	350 MTS Inboard
Lobe Lift ± .002 (0.051)	Intake	..287 (7.29)	
	Exhaust	.300 (7.62)	
Duration @ .050 in. (1.27mm) Cam Lift	Intake	196°	
	Exhaust	207°	
Journal Diameter		1.8682-1.8692 (47.452-47.478)	
Journal Out-of-Round		.001 (0.025) Max.	
Camshaft Run-Out		.002 (0.051) Max.	
Timing Chain Deflection		3/8 (10mm) from Taut Position 3/4 (19mm) Total	

Special Camshaft Information

This engine uses a steel camshaft because of the roller lifters in the engine. The fuel pump push rod is made from a material that will not wear when used with a steel camshaft. Do not use a fuel pump push rod from an engine that does not have a steel camshaft because it will wear severely in a short period of time.

Valve System:

Lifter Type			Hydraulic
Rocker Arm Ratio			1.5:1
Valve Lash (Intake & Exhaust			1 Turn Down from Zero Lash
Face Angle (Intake & Exhaust			45°
Seat Angle (Intake & Exhaust			46°
Seat Runout (Intake & Exhaust			.002 (0.051) Max.
Seat Width		Intake	1/32-1/16 (0.8-1.6)
		Exhaust	1/16-3/32 (1.6-2.3)
Stem Clearance	Production	Intake	.001-.0027 (0.0254-0.0686)
		Exhaust	.001-.0027 (0.0254-0.0686)
	Service	Intake	.0037 (0.09)
		Exhaust	.0047 (0.11)

provided by http://www.crowleymarine.com

Valve Spring	Free Length		1.91 [1-29/32] (48.5)
	Pressure (NOTE 1)	Closed @ 1.61 [1-39/64] (40.89)	76-84 lbs. ft. (103-114) N·m
		Open @ 1.16 [1-5/32] (29.46)	194-206 lbs. ft. (263-279) N·m
	Installed Height		1.718 [1-23/32] (43.7)

NOTE 1: Test spring pressure with damper removed.

Cylinder Head:

Gasket Surface Flatness	.003 (0.07) in 6 (152) area .007 (0.17) Overall Maximum

Flywheel:

Runout	.008 (0.203) Max.

E. TORQUE SPECIFICATIONS

Camshaft Sprocket	20 lb.ft. (27 N·m)
Conn. Rod Cap	45 lb. ft. (61 N·m)
Crankcase Front Cover	80 lb. in. (9 N·m)
Cylinder Head	65 lb. ft. (88 N·m)
Distributor Clamp	25 lb. ft. (34 N·m)
Exhaust Manifold	20 lb. ft. (27 N·m)
Flywheel	60 lb. ft. (81 N·m)
Coupler or Drive Plate	35 lb. ft. (48 N·m)
Flywheel Housing	30 lb. ft. (41 N·m)
Intake Manifold	30 lb. ft. (41 N·m)
Main Bearing Cap	80 lb. ft. (109 N·m)
Oil Filter By-Pass Valve	80 lb. in. (9 N·m)
Oil Pan to Crankcase (5/16-18)	165 lb. in. (19 N·m)
Oil Pan to Crankcase (1/4-20)	80 lb. in. (9 N·m)
Oil Pan Drain Plug	20 lb. ft. (27 N·m)
Oil Pump	65 lb. ft. (88 N·m)
Oil Pump Cover	80 lb. in. (9 N·m)
Rocker Arm Cover	50 lb. in. (5.5 N·m)
Spark Plug	180 lb. in. (20 N·m)
Torsional Damper	60 lb. ft. (81 N·m)
Water Pump	30 lb. ft. (41 N·m)

provided by http://www.crowleymarine.com

F. ENGINE WIRING DIAGRAM (MCM 350 Magnum Alpha/5.7L Bravo)

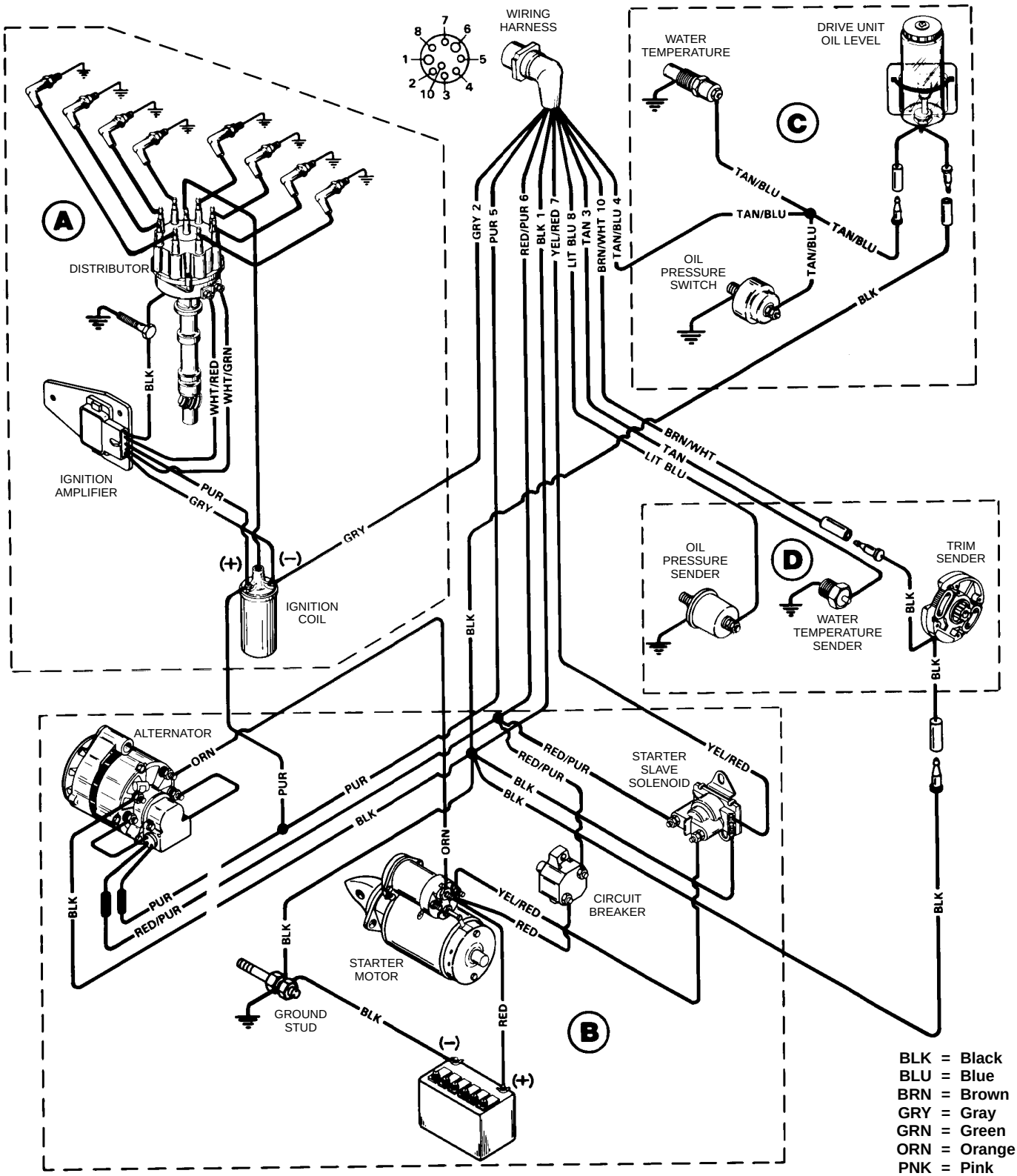

A: Ignition and Choke System
B: Starting and Charging System
C: Audio Warning System
D: Instrumentation System

50844

provided by http://www.crowleymarine.com

F. ENGINE WIRING DIAGRAM (MIE 350 MTS Inboard)

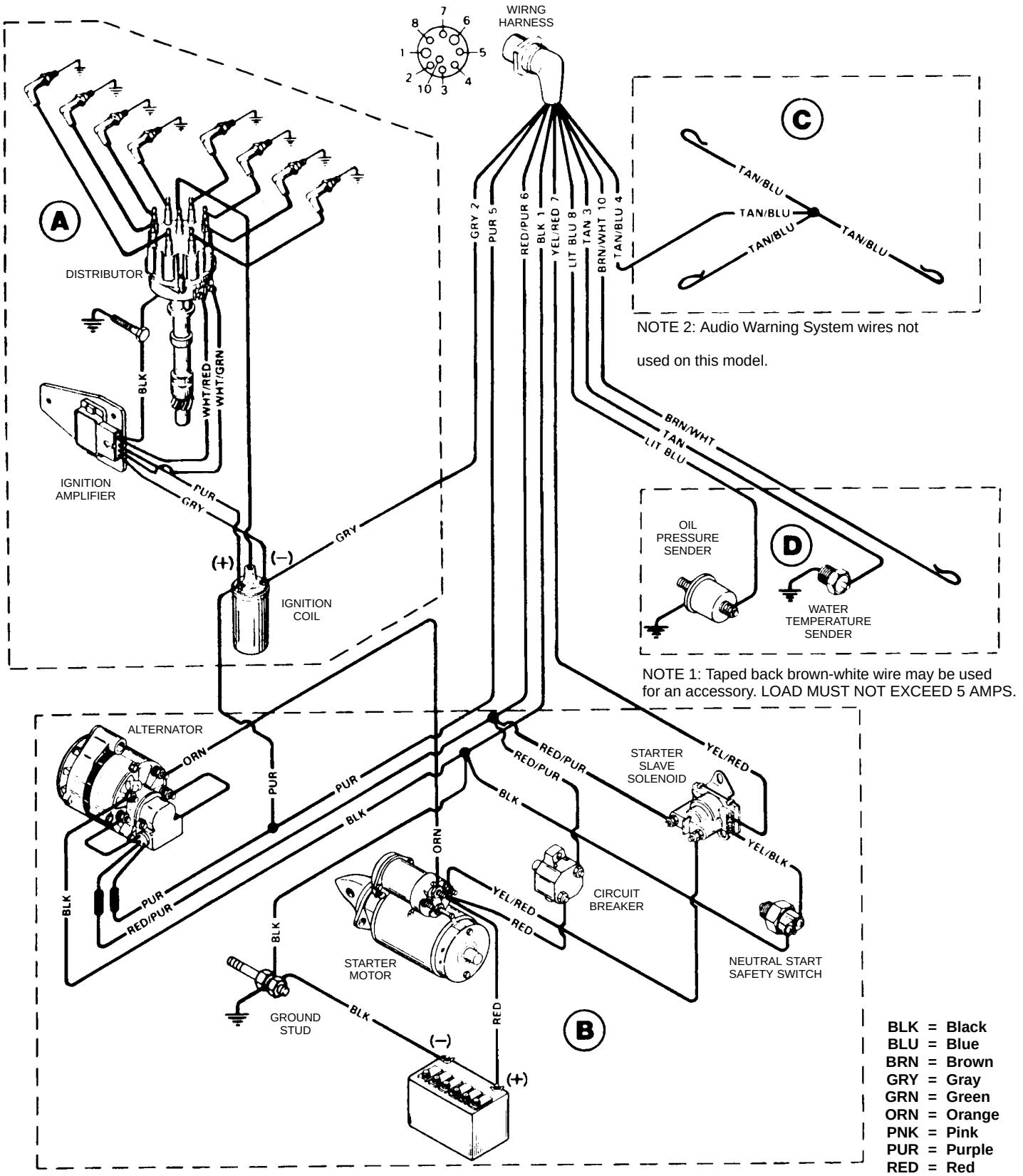

A: Ignition System
B: Starting and Charging System
C: Audio Warning System (NOTE 2)
D: Instrumentation System (NOTE 1)

BLK	=	**Black**
BLU	=	**Blue**
BRN	=	**Brown**
GRY	=	**Gray**
GRN	=	**Green**
ORN	=	**Orange**
PNK	=	**Pink**
PUR	=	**Purple**
RED	=	**Red**
Tan	=	**Tan**
WHT	=	**White**
YEL	=	**Yellow**
LIT	=	**Light**
DRK	=	**Dark**

70642

provided by http://www.crowleymarine.com

G. WATER FLOW DIAGRAM (MCM 350 Magnum Alpha) SEAWATER COOLED

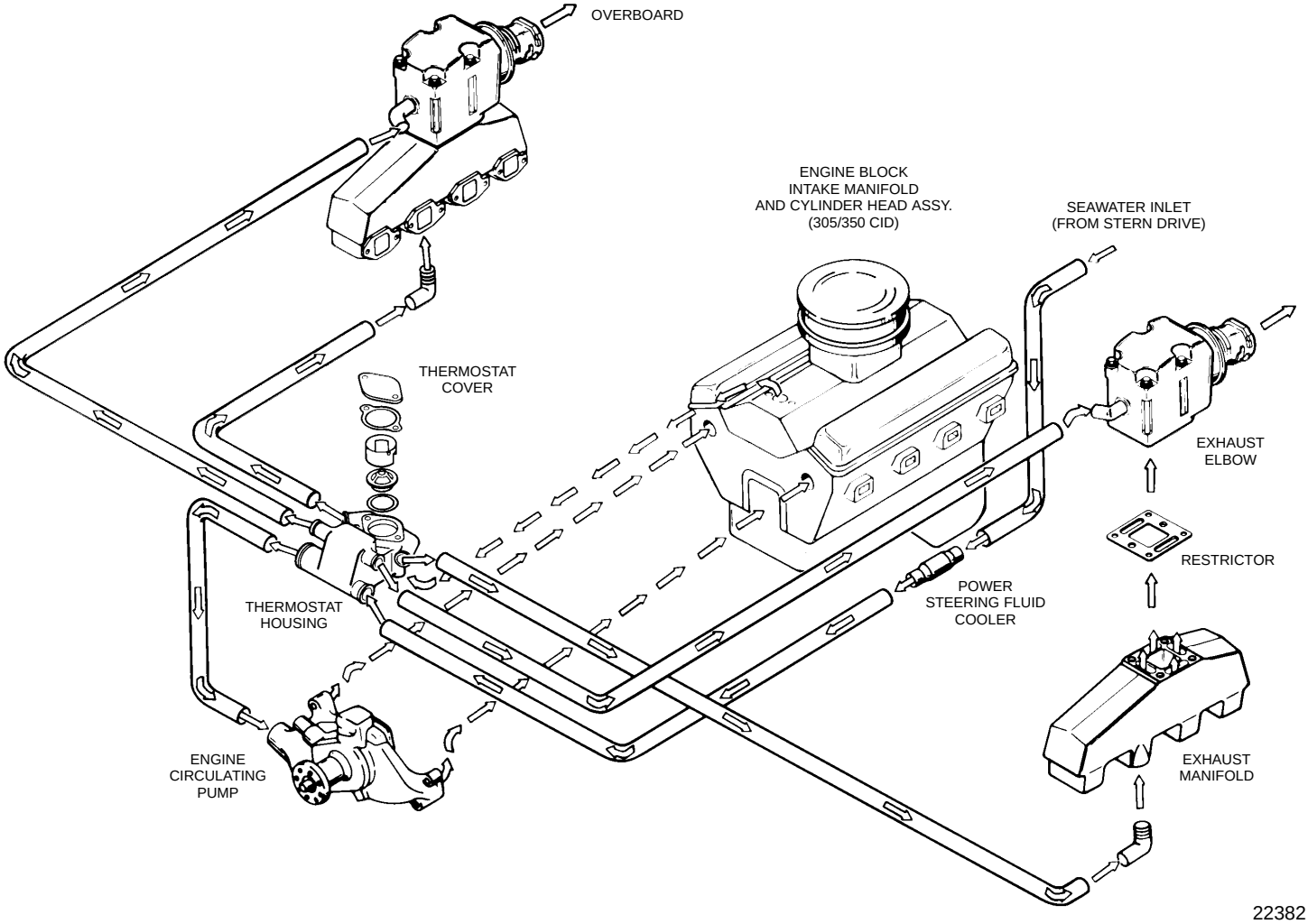

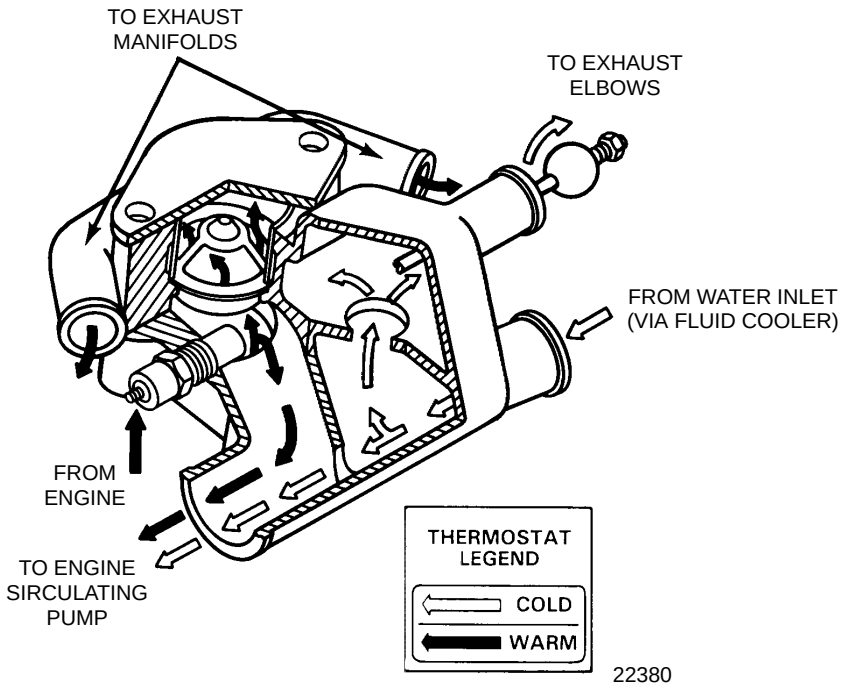

provided by http://www.crowleymarine.com

G. WATER FLOW DIAGRAM (MCM 5.7L Bravo) SEAWATER COOLED

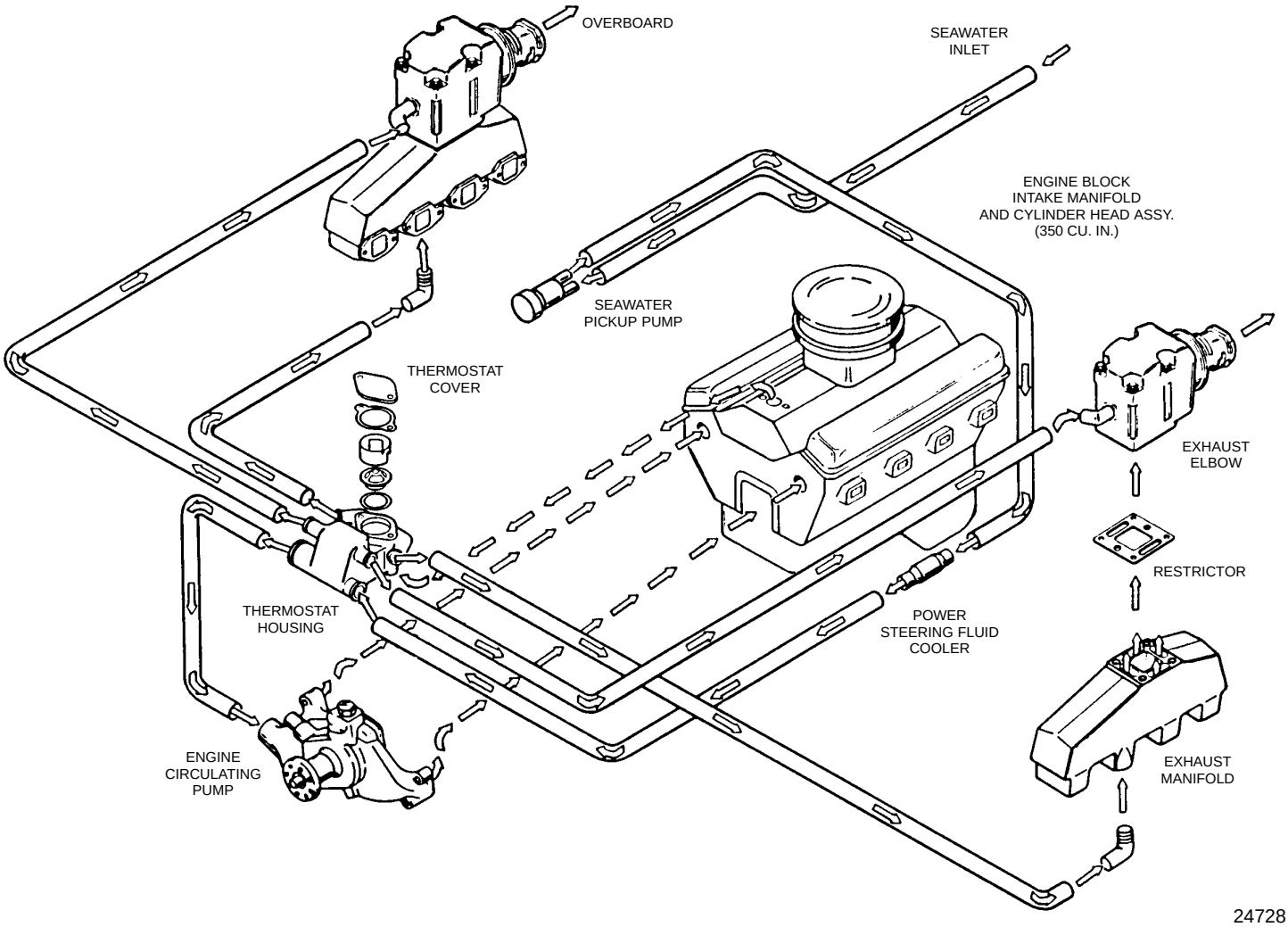

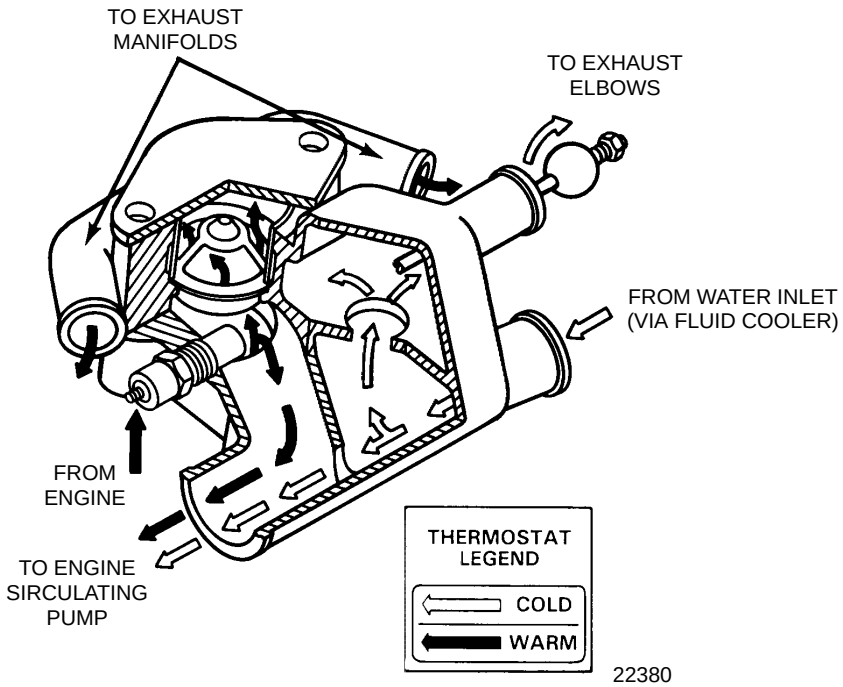

provided by http://www.crowleymarine.com

G. WATER FLOW DIAGRAM (350 MTS Inboard) SEAWATER COOLED

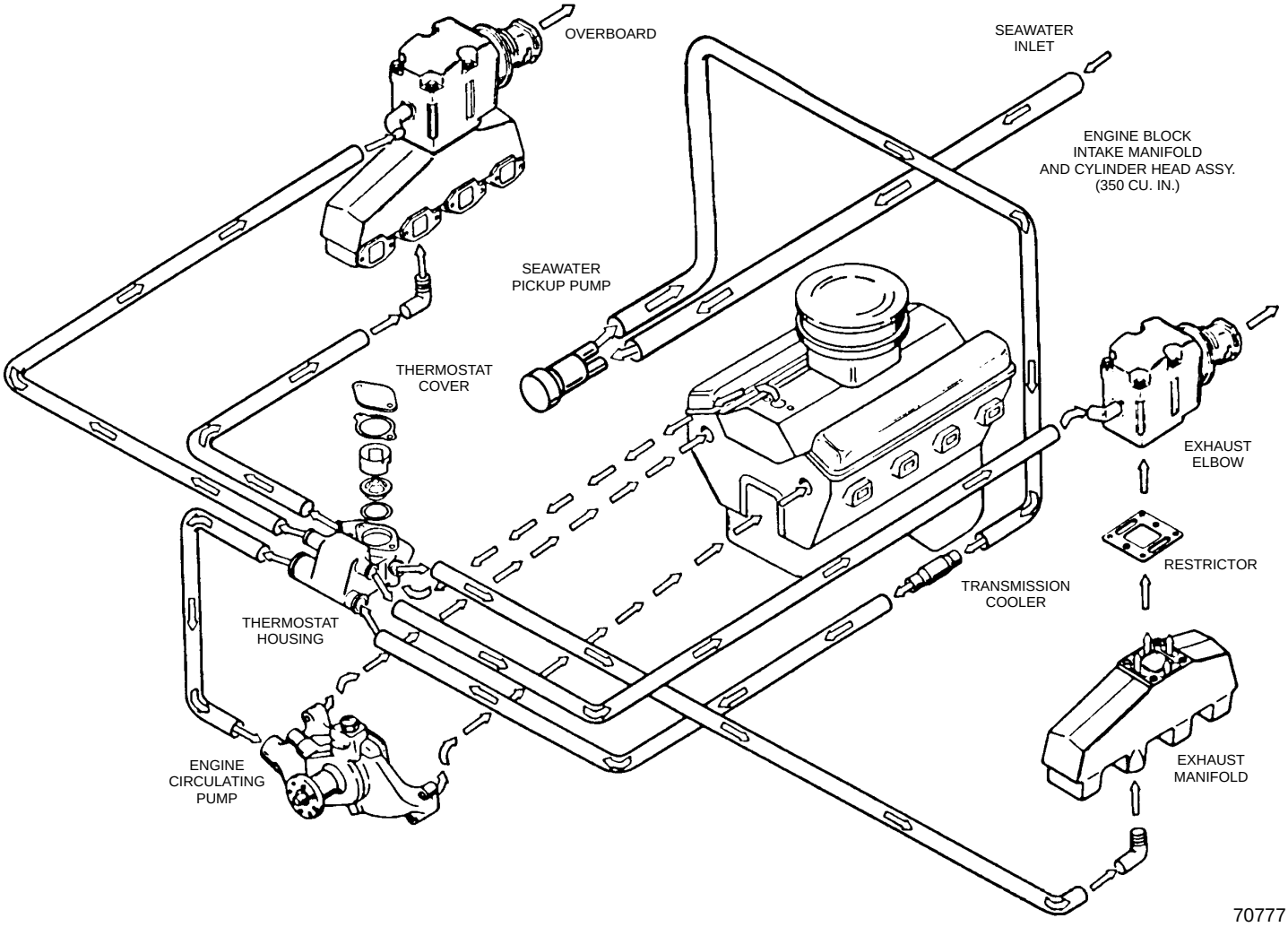

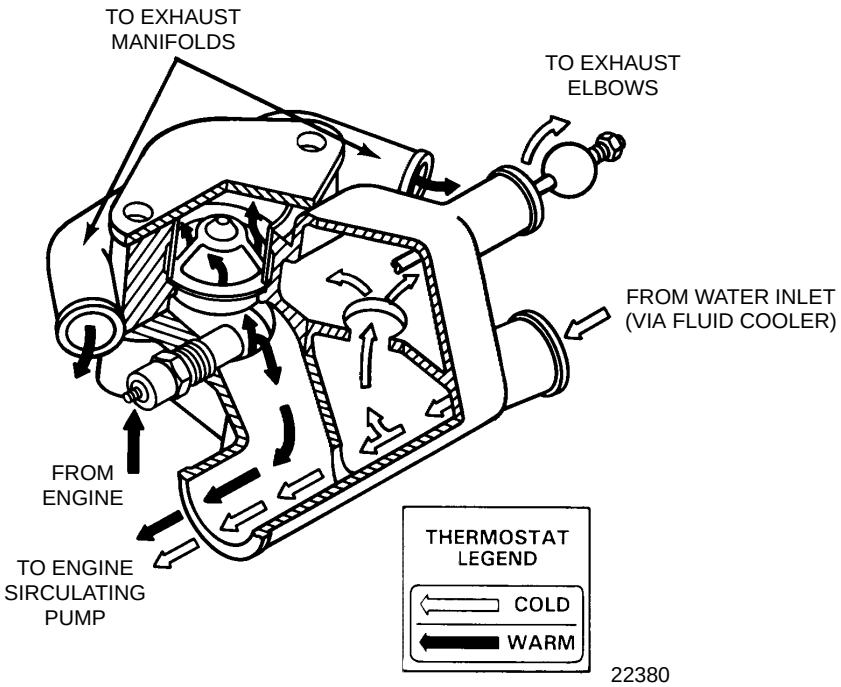

provided by http://www.crowleymarine.com