merCruiser
STERN DRIVES & INBOARDS

service bulletin

TO: SERVICE MANAGER ☐ TECHNICIANS ☐
PARTS MANAGER ☐

No. 89-27

4.3LX and 5.7L Choke Rod Linkage

The list of serial numbers following are engines having a incorrect installation of the choke rod linkage. The linkage is installed in reverse of normal installation. Figure 1

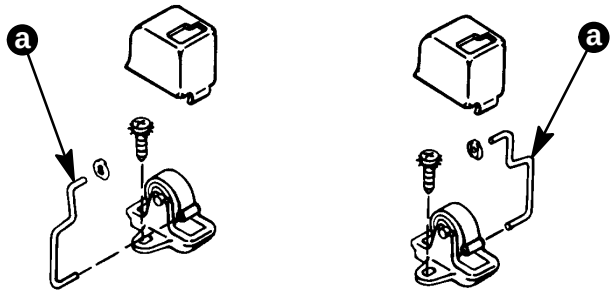

a - Choke Rod

Correct Installation **Incorrect Installation**

Figure 1

The engine may experience a hard start or a rich running condition.

When servicing these engines inspect the choke linkage for proper installation.

Engines With Reversed Choke Linkage

4.3LX Models	5.7L Models
0C755446 thru 0C755512	0C755369 thru 0C755396 0C755528 thru 0C755592

Solid State DC Voltage Regulators Used on 224 C.I.D. MerCruiser Engines

When servicing a charging system of this type, it is necessary for the regulator to have good contacts on both the positive and ground wires to operate properly. All terminal connections, including the battery, should be clean and tight. Check the battery ground connection to the engine block for proper location. MerCruiser provides a unpainted ground stud located on the flywheel housing. If ground cable is attached to the exhaust manifold or any other painted location, move to this unpainted area on flywheel housing.

V6 and V8 HEI Ignition Back-Fire or Mis-Fire Above 3000 RPM

This problem only affects the type of HEI Amplifier and its wiring harness as shown below in Figure 2.

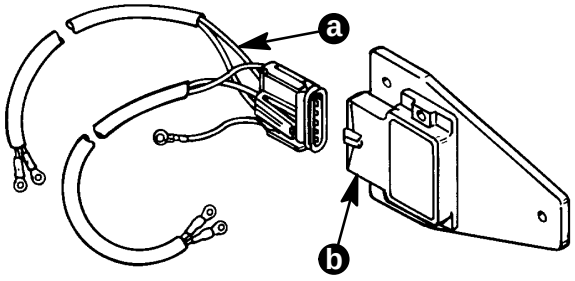

a - 84-15275A1 Harness
b - Ignition Amplifier

Figure 2

If you experience an engine back-fire or mis-fire above 3000 RPM (especially when activating an electrical accessory such as the power trim or the boats trim tabs), check the wire going to the plug-in connector terminal(s). On some units the WHT/RED and PUR wire is cross wired at the connector. Refer to Figure 3 for correct wiring.

provided by http://www.crowleymarine.com

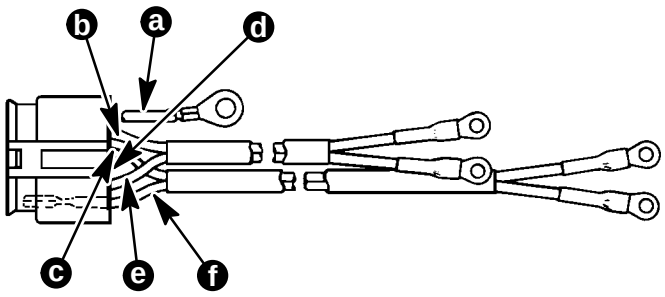

a - Black
b - White-Red
c - Purple
d - Blank Connector
e - White-Green
f - Grey

Figure 3. Sequence of Wires

Check for correct wire sequence coming out of the harness connector. Replace if necessary.

Installation of Stop-Start Panel (B-76426A9) When Used on the D.D.I.S. Ignition

Because of the different wiring configurations between the D.D.I.S. Ignition and the Conventional ignition Systems the above mention kit must be wired as shown (Figure 4 and 5) when being used on the D.D.I.S. System.

A separate 16 gauge wire (not supplied) must be attached outside the wire harness from the stop button back to the shift plate cut out switch on the engine.

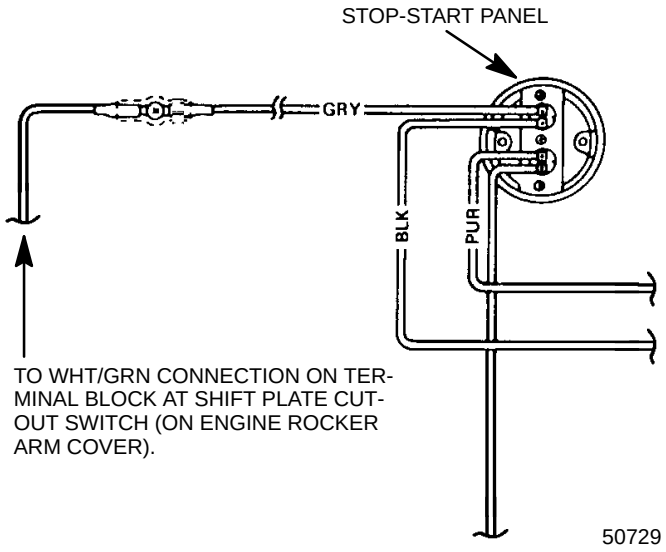

Figure 4

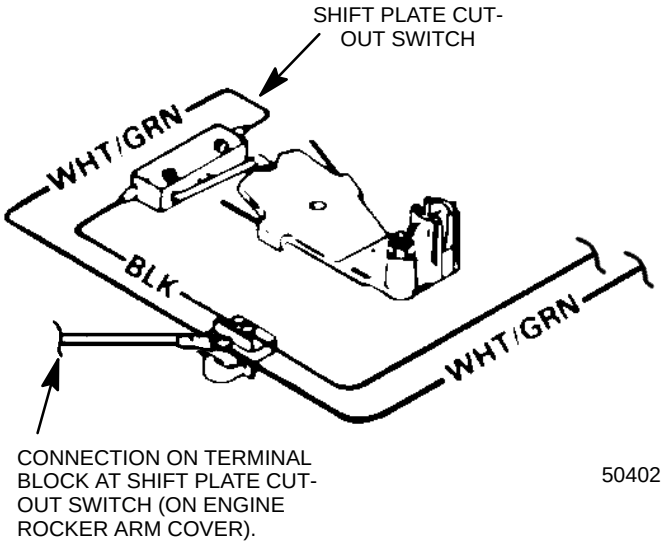

Figure 5

Connecting the kit using the Conventional Ignition procedure will not allow the D.D.I.S. Ignition engine to stop.

provided by http://www.crowleymarine.com