merCruiser STERN DRIVES & INBOARDS

service bulletin

TO: SERVICE MANAGER ☐ TECHNICIANS ☐
PARTS MANAGER ☐

No. 89-4

MR and Alpha One Shift Cable Adjustment Inspection and Readjustment

A letter is being sent to all registered owners of the following MerCruiser models (Copy of letter on page 3).

Model	Starting Engine Serial Number		Ending Engine Serial Number
MCM 120/2.5L	6809472	-	OB576607
MCM 140/3.0L	6830416	-	OB577119
MCM 170/165	6824707	-	OB578008
MCM 190/180	6833166	-	OB556528
MCM 185/175	6820516	-	OB579468
MCM 205	6919687	-	OB580208
MCM 200	6812472	-	OB581038
MCM 230	6833717	-	OB581284
MCM 260	6825413	-	OB582057
MCM 350 Magnum	OA635178	-	OB558606
MCM 454 Magnum	OA613912	-	OB583847
MCM 300 Tempest	6668730	-	OB430365
MCM 320 EFI	OA543604	-	OB517505

Shift cable adjustment inspection and readjustment applies to all gear ratios of MR and Alpha One Stern Drives only. Alpha One SS Stern Drives do not need this inspection. Also, only Stern Drives that fall between the following **Stern Drive** serial numbers may need the inspection and readjustment.

Model	Starting Stern Drive Serial Number		Ending Stern Drive Serial Number
MR/Alpha One	6862702	-	OB551555

As stated in the customer letter, it is possible that the shift system was not properly adjusted before the delivery of the boat. This misadjustment may cause the drive unit to remain in forward (or reverse) gear when shifting the remote control handle into neutral gear from either forward or reverse gear. Many remote control handles have a detent for each gear position (forward - neutral - reverse). If the shift system was adjusted for forward and reverse gear with the control handle in the forward and reverse gear detent, the system was not adjusted correctly. The installation manual shipped with each power package states that when making shift cable adjustments the remote control handle must be placed in forward gear, **full-throttle position**. Please understand that adjustments to the shifting system were not (and can not be) made by Mercury Marine. However, in the interest of customer relations, we have decided to absorb the labor cost (up to one-half hour) for readjusting the shift system on the models that fall between the **engine** serial number listed previously.

It is suggested that the Shift Assist Assembly (P/N 813995A2) be ordered and be installed on these models also. Follow the instruction as outlined on page 4 thru 17(of this bulletin) to inspect and readjust the shift system. The installation of the Shift Assist Assembly is also covered in these pages. Here again, in the interest of customer relations, Mercury Marine will absorb the cost of the part plus up to one-half hour labor to install this part.

NOTE: *Read* ***IMPORTANT*** *on page 4 about two lever remote controls.*

If, during the inspection, other parts are found to be worn or damaged (because of long term mis-adjustment), Mercury Marine will not pay for the part(s) or labor.

The Shift Assist Assembly assists the boat operator in returning to true neutral gear. Because of this, the Shift Assist Assembly will be installed on all Alpha One power packages produced after January, 1989. This Shift Assist Assembly will not provide any assistance if the shift cables are not adjusted properly. Also, the Assembly will not correct any existing shifting problems caused by worn or damaged parts.

This Shift Assist Assembly can be added to any MC-I type stern drive (outside the serial number range given in this service bulletin) that has the short slot [7/8 in. (22mm) long] in the Lever Assembly (for shift cables) on the shift plate. Mercury Marine **will not** pay for the part(s) or labor on any models other than those identified on the proceeding page.

Two “WARNING” decals (Figure 1) were sent with the letter to the registered owner. One decal is to be put on the dash so it is visible to the operator of the boat. The second decal is to be placed on the transom in a location that is visible to anyone in the vicinity of the propeller.

provided by http://www.crowleymarine.com

For application to dash:



For application to transom:



Figure 1.

To be reimbursed for allowable labor and installation of the Shift Assist Assembly, submit a completely filled out warranty claim to your Regional Service Center. Make sure the engine **and** stern drive serial numbers are on the claim. Only claims for the models that fall within the **engine** serial numbers will be honored. The following part number and labor flat rate codes and times must be on the warranty claim.

Readjust Shift System:
- Flat rate code - 22140
- Labor allowance - .5 hour

Install Shift Assist Assembly:
- Part Number - 813995A2
- Flat rate code - 25240
- Labor Allowance - .5 hour

provided by http://www.crowleymarine.com

MERCURY MARINE DIVISION OF BRUNSWICK CORPORATION

January, 1989

Dear MerCruiser Customer:

At the time you purchased and took delivery of your boat, it is possible that the shift system was not properly adjusted. If so, it may remain in gear with the propeller turning, in spite of the fact that the control handle is in neutral. This may happen when the control handle is shifted from either forward to neutral or from reverse to neutral. WARNING: A PERSON NEAR THE PROPELLER MAY BE SERIOUSLY INJURED IF HIT BY A PROPELLER UNDER POWER -- EVEN AT IDLE SPEED.

You may be able to identify this condition by the feel of the control handle when shifting into neutral. It can also be visually identified by trimming out the drive unit until the propeller is visible and watching the propeller while slowly shifting into neutral from both forward and then reverse. If you find that the propeller continues turning under power after the control is shifted into neutral, have your drive unit inspected and adjusted by your authorized MerCruiser dealer.

Please understand that adjustments to the shifting system were not made by Mercury Marine. These adjustments were made by the boat builder and/or dealer, but most often the dealer at the time the drive unit was installed prior to delivery to you. Mercury Marine goes to great lengths to train boat builders and dealers in the proper method of adjusting shift systems, and, in addition, provides written adjustment instructions with every unit. It is reasonable, we believe, that as a result of these efforts, Mercury Marine should not bear the cost associated with the readjustment. However, in the interest of good customer relations, we have decided to absorb the labor cost (up to one-half hour) for readjusting the shift system.

In addition, there is a Shift Assist Assembly available from your dealer free of charge. This shift Assist Assembly will ensure return of the throttle/shift handle to the neutral detent position.

It can be installed by your dealer at the time the shift readjustment is made. Here again, the installation labor expense (up to one-half hour) will be absorbed by Mercury Marine.

SAFE BOATING PRACTICES REQUIRE THAT THE ENGINE BE TURNED OFF WHEN ANYONE IS NEAR THE PROPELLER. We urge you to do this and instruct other operators of your boat to do so as well. As a reminder of this safe boating practice, enclosed are two decals for your boat; the small one, part number 37-814828-1, for placing in sight at the operator's station and the larger one, part number 37-814828-2, on the transom visible to people in the area of the propeller.

If you no longer own this boat, please forward this letter to the current owner.

Very truly yours,

Mercury Marine

W6250 WEST PIONEER ROAD • P.O. BOX 1939 • FOND DU LAC, WI 54936-1939 U.S.A. • PHONE (414) 929-5000 • FAX (414) 929-5060

Mercury Outboards • MerCruiser Stern Drives and Inboards • Mariner Outboards • Quicksilver Parts and Accessories

provided by http://www.crowleymarine.com

QUICKSILVER®
MARINE PARTS AND ACCESSORIES

813995A2 Shift Assist Assembly Installation

IMPORTANT: If boat is equipped with A REMOTE CONTROL THAT HAS SEPARATE SHIFT AND THROTTLE LEVERS, this shift assist assembly should NOT be used. The use of the shift assist assembly with this type of remote control can cause the shift lever to move out of gear unexpectedly.

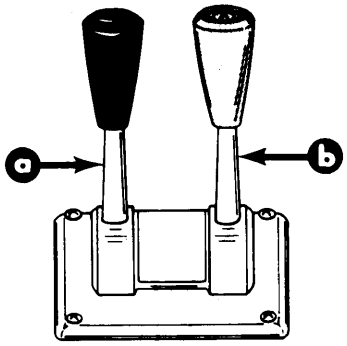

a - Shift Lever
b - Throttle Lever

The following checks must be performed to ensure all segments of the shifting system are functioning properly.

Checking for Excessive Play

Checking the drive unit for excessive play in shift system can be done with the boat in the water or on land. Refer to appropriate procedure following:

Boat in Water (Engine Running)

⚠ WARNING

At least two people will be needed for the following procedure, one person to check the adjustment and one person to stay at the control station of the boat.

Ensure boat is secured to dock and precautions have been taken to avoid damage to boat prior to placing drive unit into gear.

1. Start engine and let it warm up (Refer to operating procedures in Operation and Maintenance Manual).
2. Disconnect throttle cable(s) from carburetor(s).

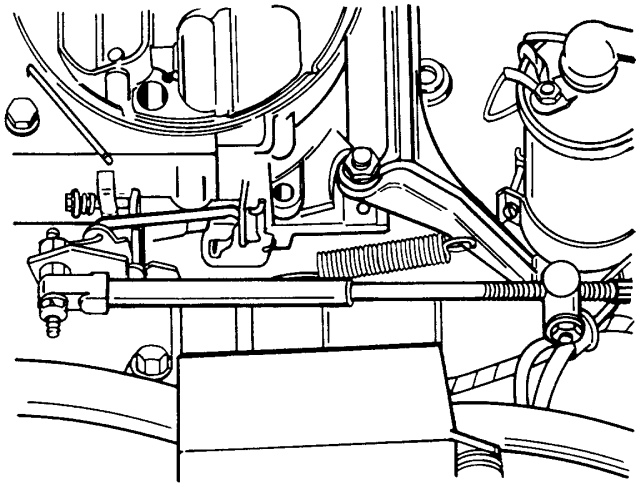

22062

a - Throttle Cable End Guide
b - Carburetor Throttle Lever

provided by http://www.crowleymarine.com

3. Disconnect remote control shift cable.

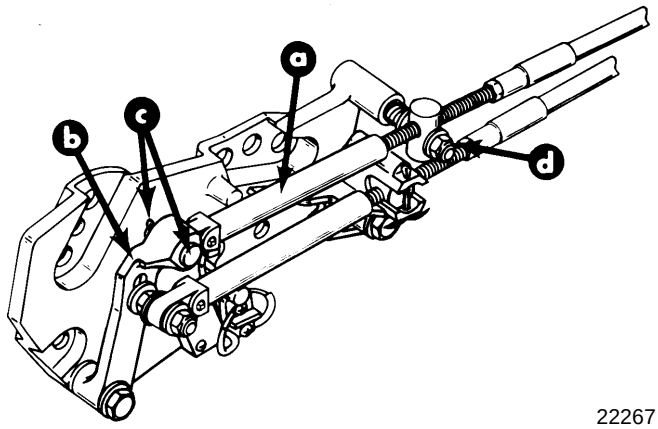

22267

a - Remote Control Shift Cable
b - Plastic Shift Lever
c - Clevis Pin and Cotter Pin
d - Locknut and Washer

Later Models (With Plastic Shift Lever)

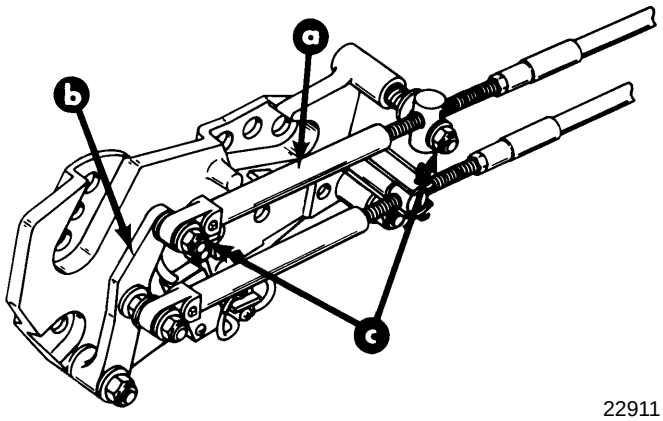

22911

a - Remote Control Shaft Cable
b - Metal Shift Lever
c - Locknuts and Washers

Earlier Models (With Metal Shift Lever)

IMPORTANT: When pushing or pulling on drive unit shift cable, in the following steps, apply just enough pressure so that shift cutout switch roller just starts to move off center of notch; then, ease up slightly. Use a fine tip marking device to mark threaded tube to obtain an accurate measurement.

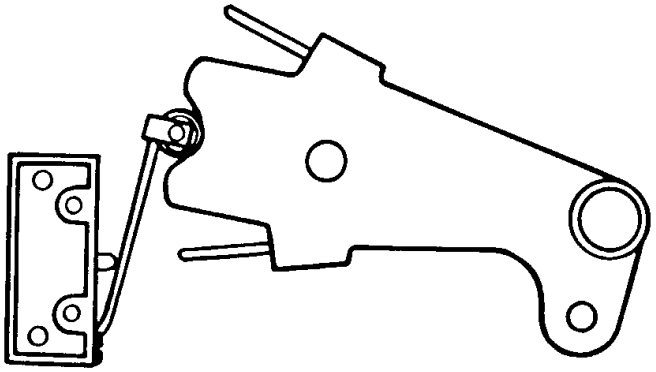

22911

4. Check for excessive play in drive unit shift system as follows:
   a. Push in on drive unit shift cable to shift into forward gear position.
   b. Place a mark on shift cable threaded tube, against cable end guide.

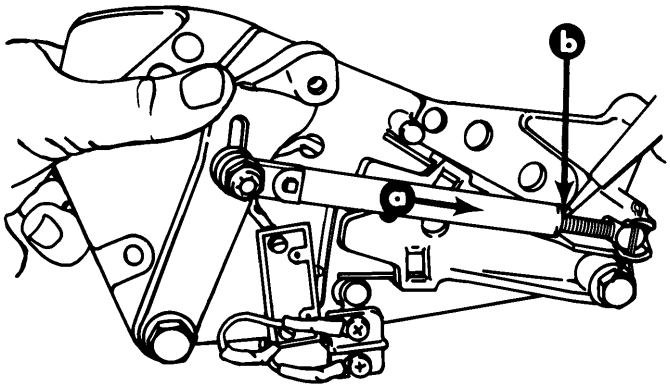

50499

a - Drive Unit Shaft Cable
b - Threaded Tube-Mark “Here”

provided by http://www.crowleymarine.com

c. Lightly pull on drive unit shift cable end guide and place another mark on threaded tube.

d. Measure distance between both marks. Distance should be **9/16 in. (14mm) or less**.

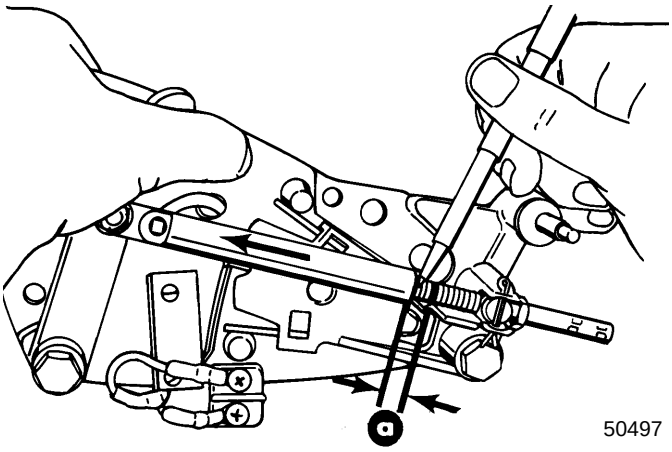

a - 9/16 in. (14mm) or Less

If play is 9/16 in. (14mm) or less: No further attention to drive unit is needed. Proceed with adjustments.

If play is more than 9/16 in. (14mm): Drive unit must be removed to further isolate excessive play.

Boat Out of Water (Engine Off)

1. Disconnect remote control shift cable.

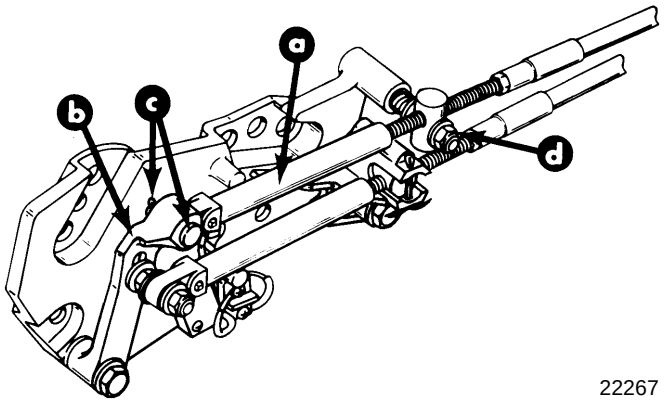

a - Remote Control Shift Cable
b - Plastic Shift Lever
c - Clevis Pin and Cotter Pin
d - Locknut and Washer

Later Models (With Plastic Shift Lever)

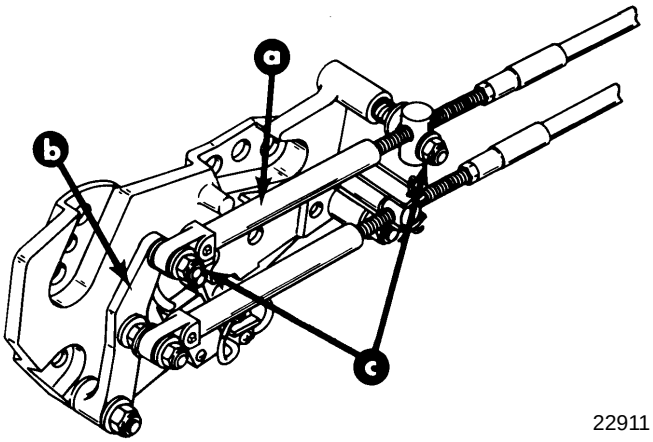

a - Remote Control Shaft Cable
b - Metal Shift Lever
c - Locknuts and Washers

Earlier Models (With Metal Shift Lever)

IMPORTANT: When pushing or pulling on drive unit shift cable, in the following steps; apply just enough pressure so that shift cutout switch roller just starts to move off center of notch; then, ease up slightly. Use a fine tip marking device to mark threaded tube to obtain an accurate measurement.

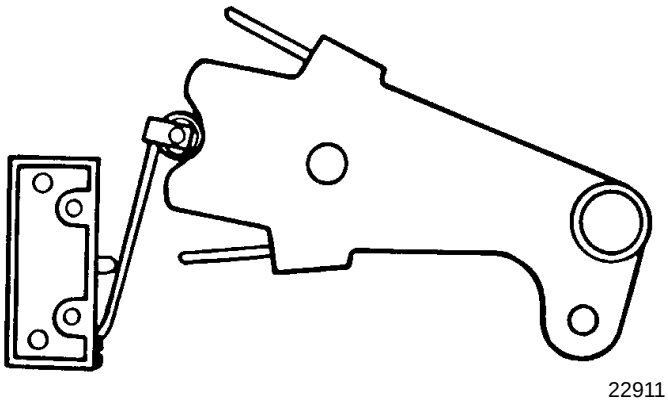

provided by http://www.crowleymarine.com

2. Check for excessive play in drive unit shift system as follows:

   a. Place drive unit into forward gear by pushing in on drive unit shift cable, while simultaneously rotating propeller shaft counterclockwise until shaft stops, to ensure full clutch engagement.

   b. Place a mark on shift cable threaded tube against edge of end guide.

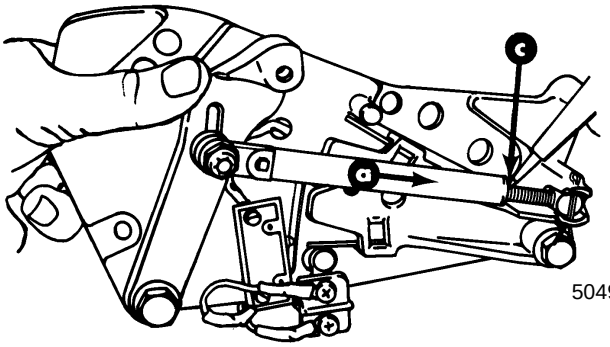

50499

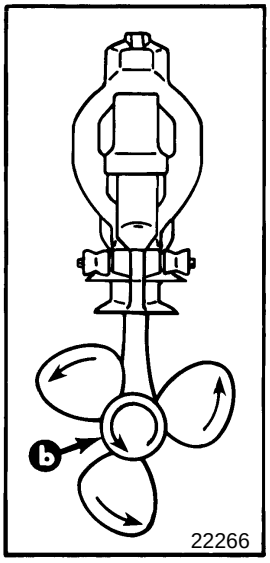

22266

a - Drive Unit Shift Cable
b - Propeller Shaft - Rotate
c - Threaded Tube - Mark Here

   c. While maintaining pressure on propeller shaft in a counterclockwise direction (to keep clutch locked with forward gear), lightly pull out on drive until shift cable end guide and place another mark on threaded tube.

   d. Measure distance between both marks. Distance should be **9/16 in. (14mm) or less**.

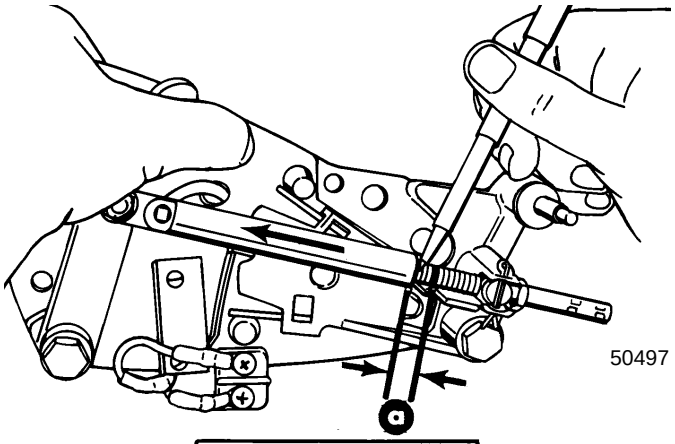

50497

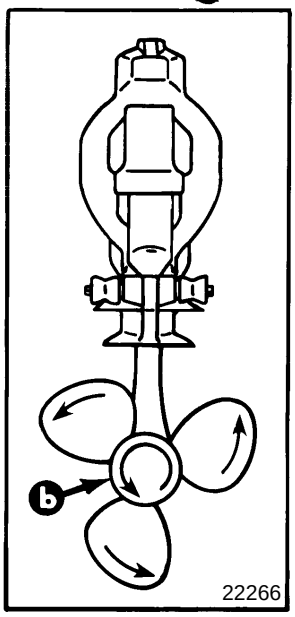

22266

a - 9/16 in. (14mm) or Less
b - Propeller Shaft - Maintain Pressure

If play 9/16 in. (14mm) or less: No further attention to drive unit is needed. Proceed with adjustments.

If play is more than 9/16 in. (14mm): Drive unit must be removed to further isolate excessive play.

provided by http://www.crowleymarine.com

Isolating Excessive Play

NOTE: *Tools shown will be available thru Quicksilver at a later date. Refer to the end of this instruction booklet for templates and patterns needed to fabricate similar tools.*

1. To determine shift shaft rotational end play, use a tool such as the one shown, to measure degrees of play in shift shaft, with clutch locked and held in forward gear.

   a. Install tool as shown.

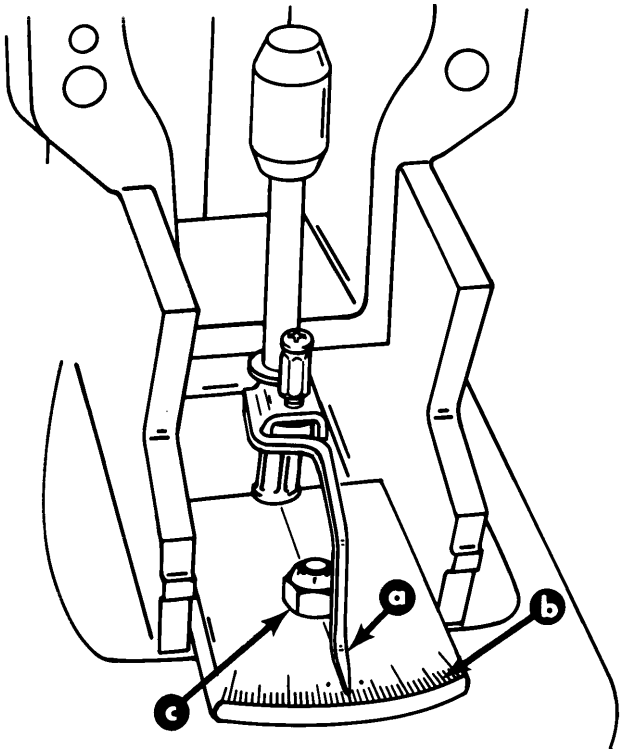

50498

a - Pointer - Installed on Shift Shaft
b - Scale (1° Increments)
c - Nut - Hand Tight only

   b. Rotate shift shaft coupler clockwise while simultaneously turning propeller shaft counterclockwise until clutch locks into forward gear. Make note of pointer location on scale.

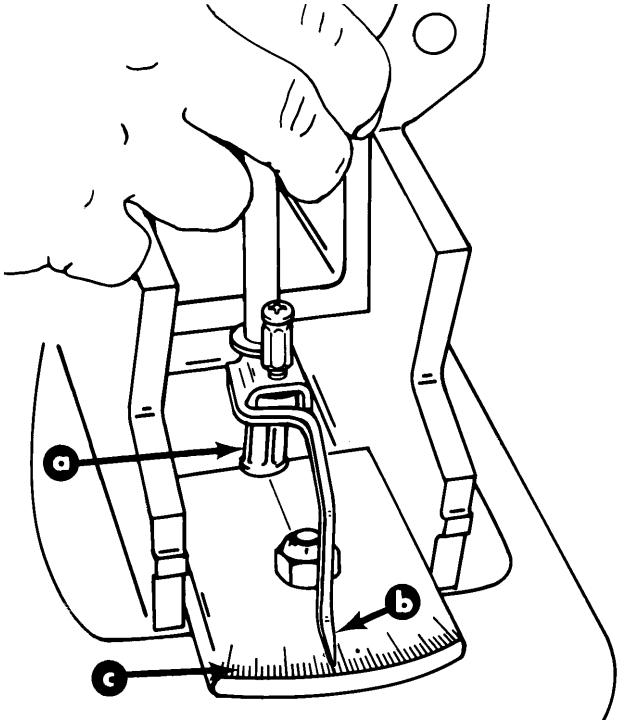

50498

a - Shift Shaft Coupler
b - Pointer
c - Scale

   c. While maintaining pressure on propeller shaft to keep clutch locked with gear, lightly turn shift shaft coupler counterclockwise. Make note of pointer location.

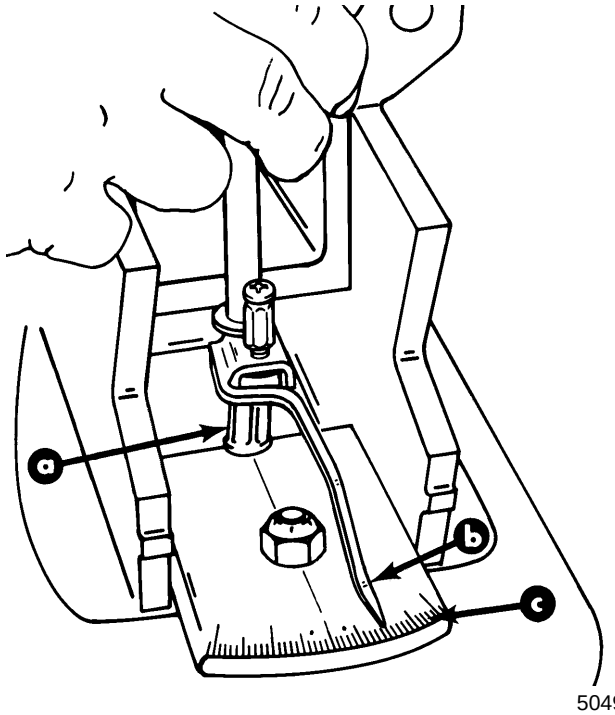

50498

a - Shift Shaft Coupler
b - Pointer
c - Scale

provided by http://www.crowleymarine.com

d. Determine total degrees of movement.

If 12° or less: Problem is with the drive unit shift cable, upper shift shaft assembly and lever assembly.

If more than 12°: Problem is with gear case shift spool assembly.

Whichever the case, refer to Stern Drive Service Manual for repair of applicable components.

Installing New Remote Control Shift Cable Attaching Hardware

EARLIER MODELS (WITH METAL SHIFT LEVER)

1. Remove short studs from locations shown. Apply Loctite to coarse threads of new longer studs and install as shown. Tighten securely.

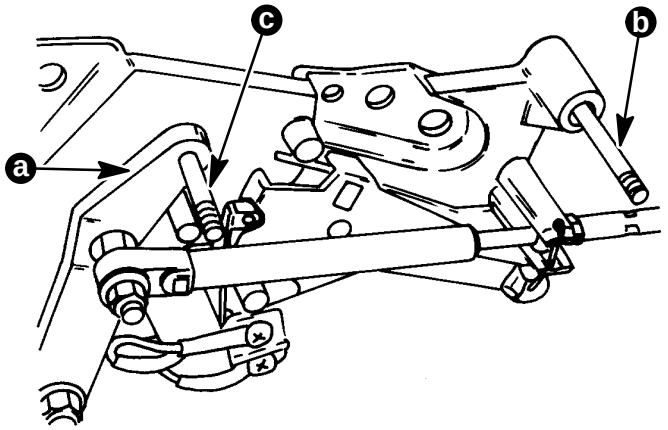

25443

a - Metal Shift Lever
b - 2-7/8 in. Stud (73mm)
c - 2-1/8” Stud (54mm)

LATER MODELS (PLASTIC SHIFT LEVER)

1. Remove and discard short clevis pin. Remove short stud from location shown. Apply Loctite to coarse threads of new longer stud and install as shown. Tighten securely.

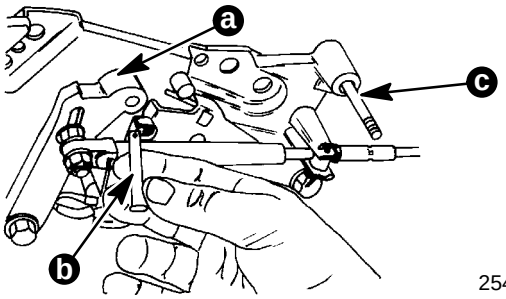

25444

a - Plastic Shift Lever
b - Longer Clevis Pin
c - 2-7/8” Stud (73mm)

Checking Remote Control Shift Cable Output

IMPORTANT: Remote control must provide a shift cable travel (at the shift plate end) of 2-7/8 in. (73mm) to 3-1/8 in. (80mm) with a 15 – 20 lb.(6.8 – 9 kg) load applied to the cable end guide. This measurement can be taken by installing the remote control shift cable and using the shift assist assembly (provided) to place the proper load of the shift cable (drive unit shift cable should not be installed).

1. Place remote control in forward gear wide open throttle position. Place a mark on threaded tube against edge of cable end guide.

provided by http://www.crowleymarine.com

2. Place remote control in reverse gear wide open throttle position. Measure the distance between the edge of shift cable end guide and the mark made in step 1. Total shift cable output is not to be less than 2-7/8 in. (73mm) or more than 3-1/8 (80mm). If output is incorrect, remote control and/or shift cable should be replaced.

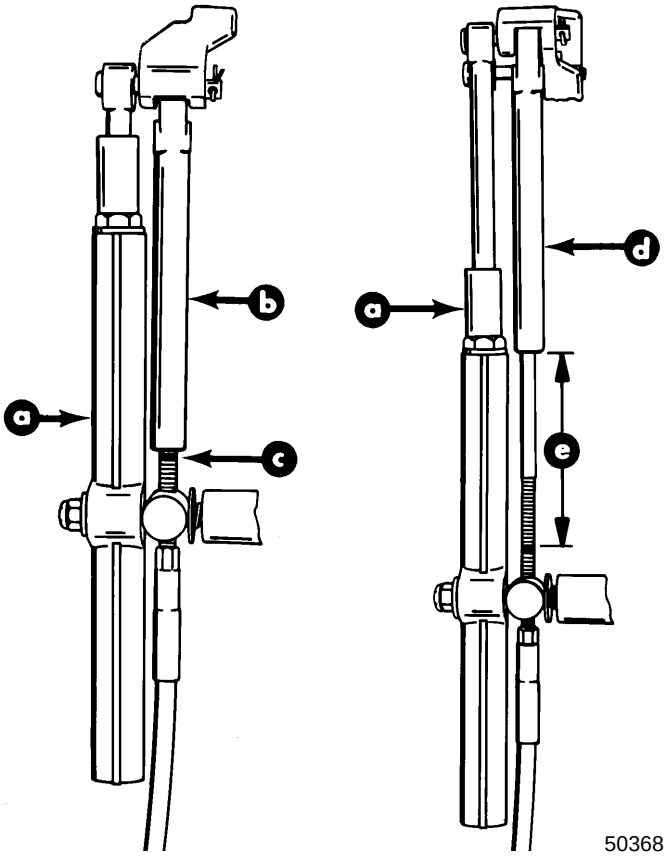

50368

a - Shift Assist Assembly
b - Remote Control Shift Cable - In Forward Gear Position
c - Place a Mark on Tube Against Edge of Cable End Guide
d - Remote Control Shift Cable - In Reverse Gear Position
e - Measurement Taken from Mark to Edge of Cable End Guide: **2-7/8 in. (73mm) to 3-1/8 in.**

Checking Cutout Switch Timing

1. Disconnect cutout switch white/green wire from terminal block.
2. Connect ohmmeter positive (+) lead to cutout switch white/green wire and ohmmeter negative (-) lead to cutout switch black wire at terminal block.
3. Set Ohmmeter on RX1 scale.

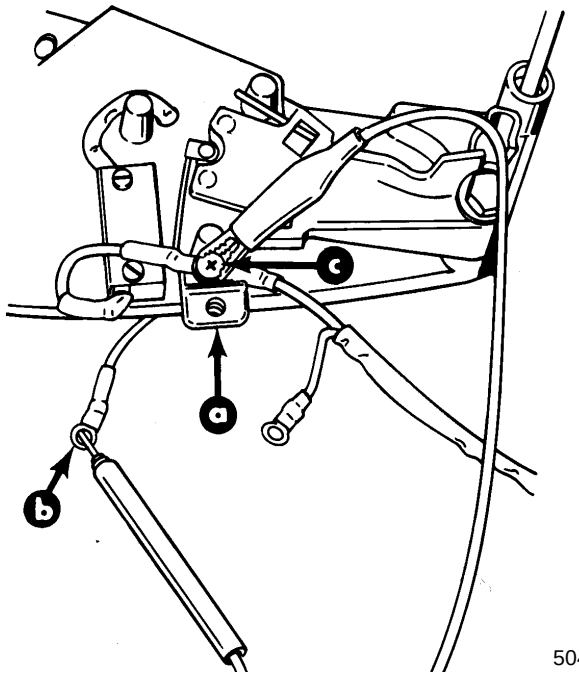

50497

a - Terminal Block
b - Cutout Switch White/Green Wire
c - Cutout Switch Black Wire

provided by http://www.crowleymarine.com

NOTE: *Tool shown will be available thru Quicksilver at a later date. Refer to the end of this instruction booklet for the pattern and dimensions needed to fabricate a similar tool.*

4. Slowly move cutout switch roller off of its seat. Circuit should close (full continuity reading), when roller is moved 1/8 in. (3mm). Use the 1/8 in. rod on the end of special tool to gauge this movement.

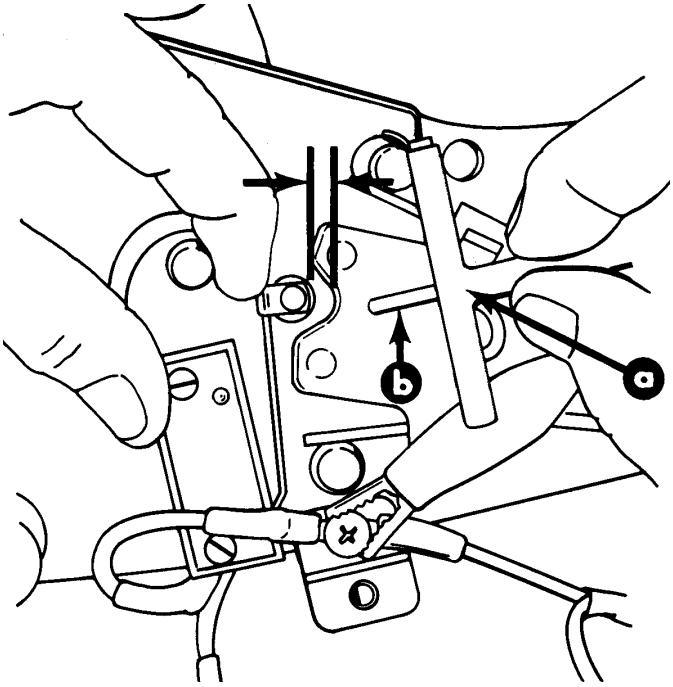

50497

a - Special Tool
b - 1/8 in. (3mm)

If switch closes too early (less than 1/8 in.): Roller must be bent away from its seat.

If switch closes too late (more than 1/8 in.): Roller must be bent toward its seat.

If necessary, use special tool to bend lever as shown.

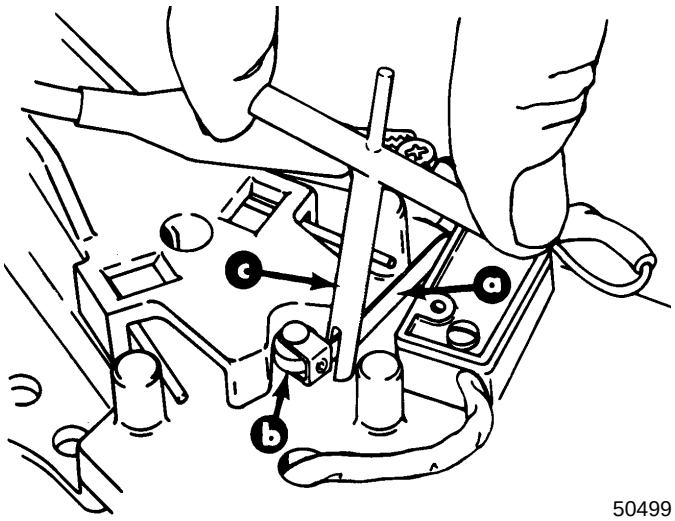

50499

a - Lever
b - Roller
c - Special Tool

5. Once cutout switch is timed properly, reconnect wires at terminal block and coat terminals with liquid neoprene.

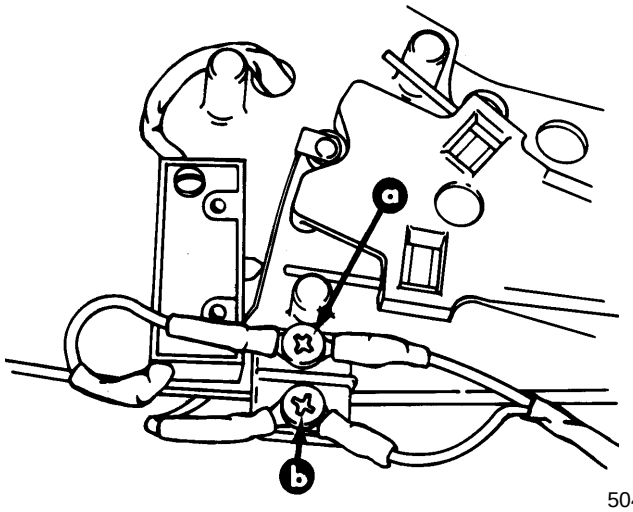

50499

a - Black Wires
b - White/Green Wires

provided by http://www.crowleymarine.com

Installing Drive Unit Shift Cable

1. Push in on drive unit shift cable while simultaneously turning propeller shaft counterclockwise until shaft stops, to ensure drive unit is completely in forward gear. Maintain pressure on propeller shaft with a suitable device (elastic strap).
2. Measure distance between center of hole in shift cable end guide and center of brass barrel. Measurement should be 6 in. (153mm).

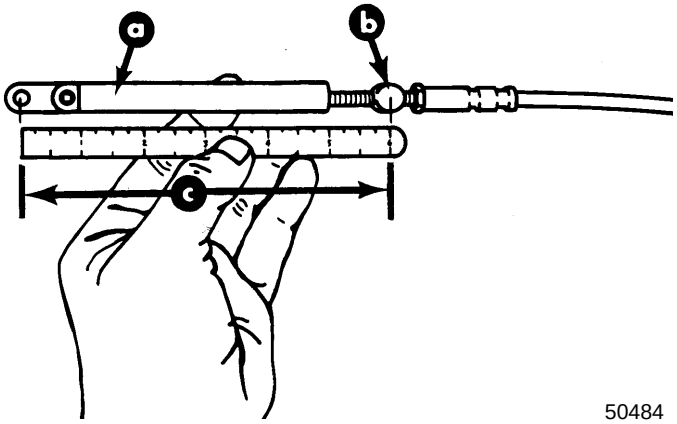

50484

a - End Guide
b - Brass Barrel
c - 6 in. (153mm)

3. Once brass barrel adjustment is correct, install end guide “stop clip” on threaded tube. Position as shown, with tang touching brass barrel.

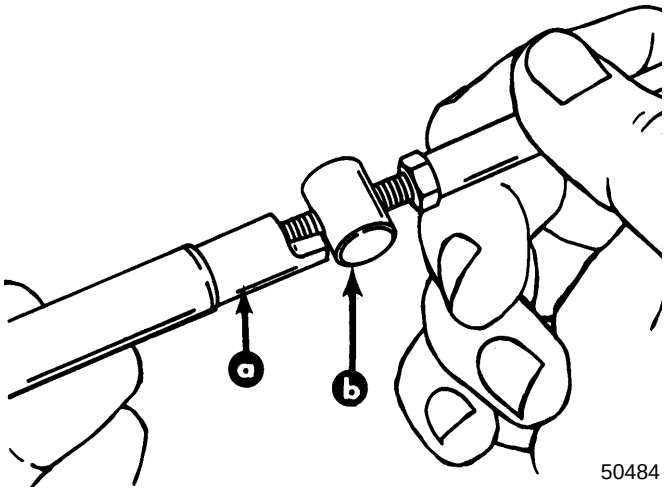

50484

a - Stop Clip
b - Brass Barrel

4. Install drive unit shift cable as shown. Secure brass barrel in barrel retainer with cotter pin, spreading both prongs. Secure end guide to shift lever with a washer on each side of end guide and locknut. Tighten locknut until it bottoms, then, back off 1/2 turn.

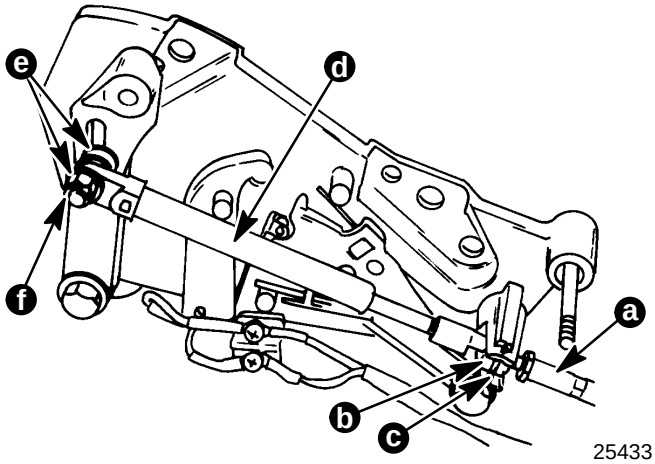

25433

a - Drive Unit Shift Cable
b - Brass Barrel
c - Cotter Pin
d - End Guide
e - Washers
f - Locknut

Installing Remote Control Shift Cable

1. Install sleeve, spring and large I.D. washer on stud as shown.

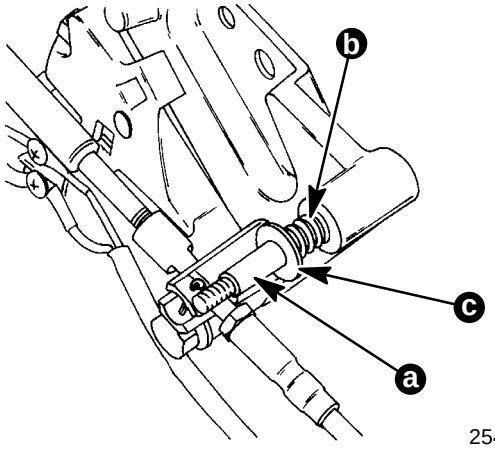

25431

a - Sleeve
b - Spring
c - Large I.D. Washer

provided by http://www.crowleymarine.com

2. Ensure shift lever adjustable stud is at bottom of slot. If necessary, loosen stud and move it to bottom of slot, then retighten stud.

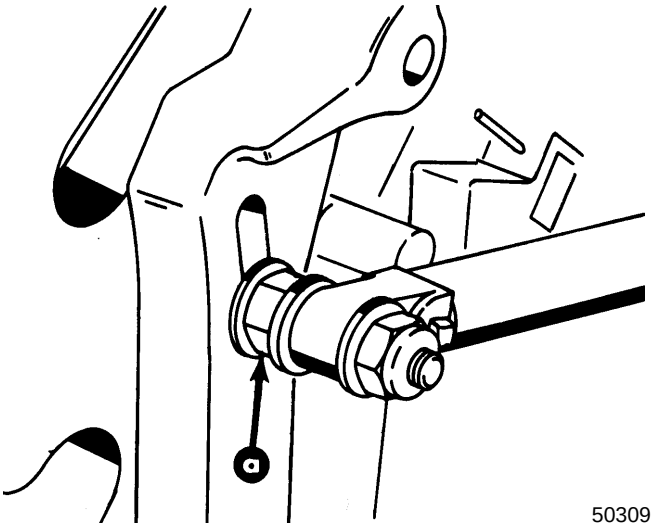

a - Adjustable Stud

3. Place drive unit into forward gear by pushing in on drive unit shift cable, while simultaneously rotating propeller shaft counterclockwise until shaft stops, to ensure full clutch engagement.

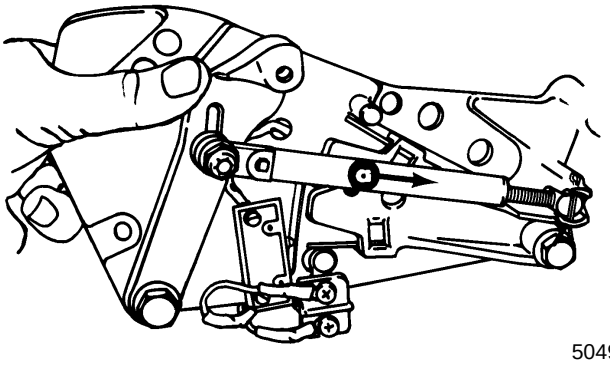

a - Drive Unit Shift Cable - Push In

4. Place remote control into **forward gear, wide-open-throttle position.**

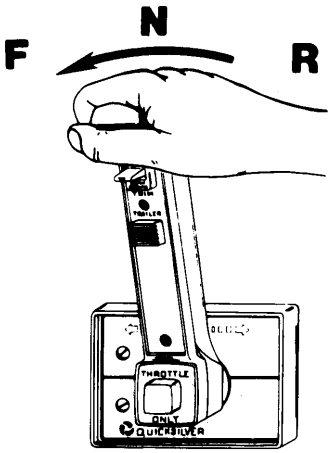

5. Lightly pull on remote control shift cable end guide (to remove slack from remote control and cable) and adjust brass barrel as necessary to align attaching points with shift lever clevis pin hole and stud.

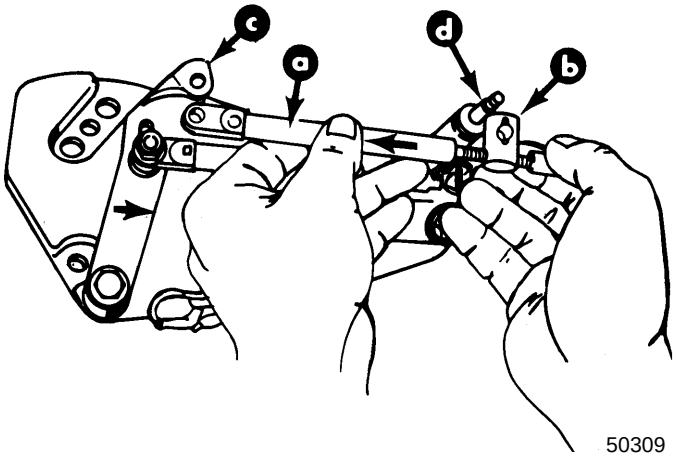

a - End Guide
b - Brass Barrel
c - Shift Lever Clevis Pin Hole
d - Stud

provided by http://www.crowleymarine.com

6. After cable has been aligned, turn brass barrel 4 turns **away** from cable end guide.

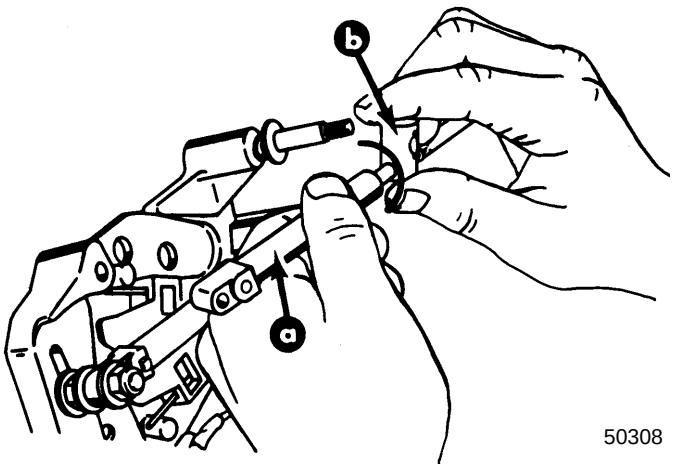

50308

a - End Guide
b - Brass Barrel

7. Temporarily install remote control shift cable on stud and install clevis pin.

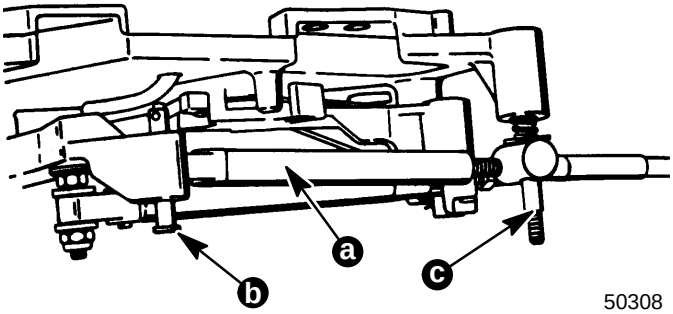

50308

a - Remote Control Shift Cable
b - Clevis Pin
c - Stud

8. Shift remote control into **reverse gear, wide-open-throttle position**, while simultaneously rotating propeller shaft clockwise until shaft stops to ensure full clutch engagement.

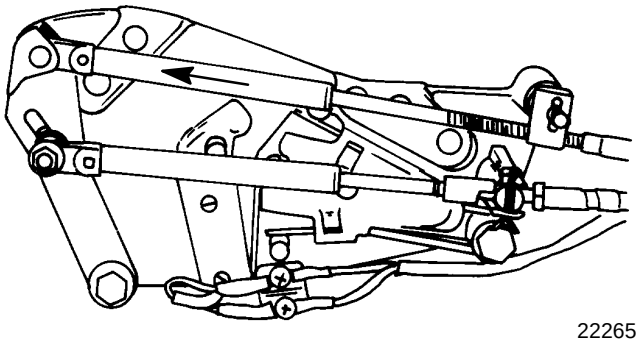

22265

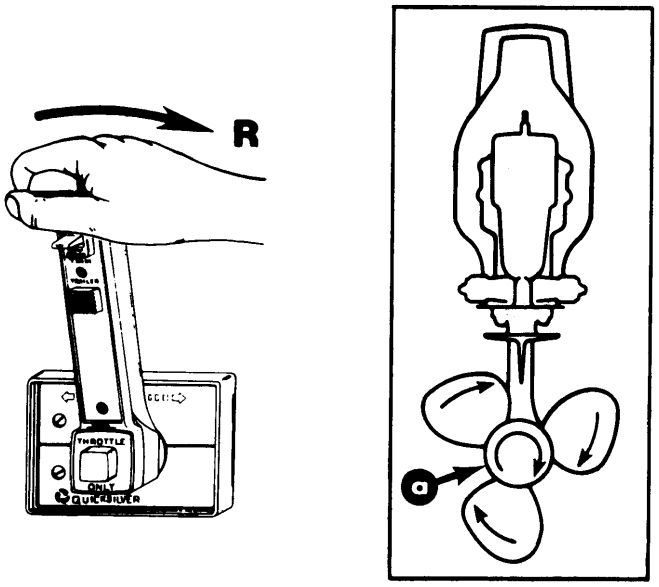

22267

a - Propeller Shaft - Rotate Clockwise

provided by http://www.crowleymarine.com

9. Check shift cutout switch lever position. Roller must be centered.

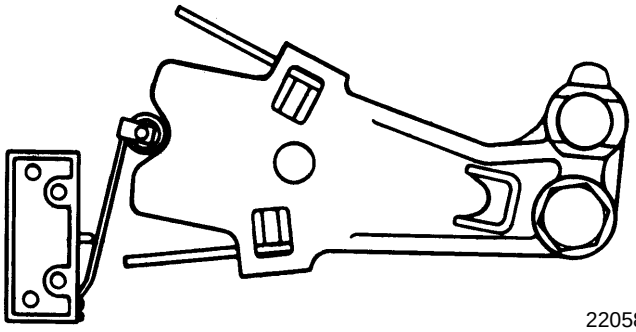

10. If roller is not centered:
    a. Check to ensure adjustable stud is at bottom of slot in shift lever.
    b. Check remote control for proper shift cable output (at shift plate) [2-7/8 in. (73mm) to 3-1/8 in. (80mm)].
    c. If “a” and “b” are correct, check to ensure drive unit shift cable is not crushed or kinked. If drive unit shift cable is binding the shift cutout switch roller will move off center when shifting “into” and “out of” forward and reverse). If cable is binding, replace cable following instructions in stern drive service manaul.
    d. If shift cutout switch roller moves off center when shifting into **reverse only**, drive unit shift cable may not be installed properly at bell housing. Remove stern drive unit and ensure shift cable is installed properly. Refer to stern drive service manual.

NOTE: *If it was necessary to replace drive unit shift cable, repeat these instructions beginning with “Installing Drive Unit Shift Cable” listed previously.*

11. After remote control shift plate has been properly adjusted, reinstall cable and shift assist assembly and secure with hardware as shown.

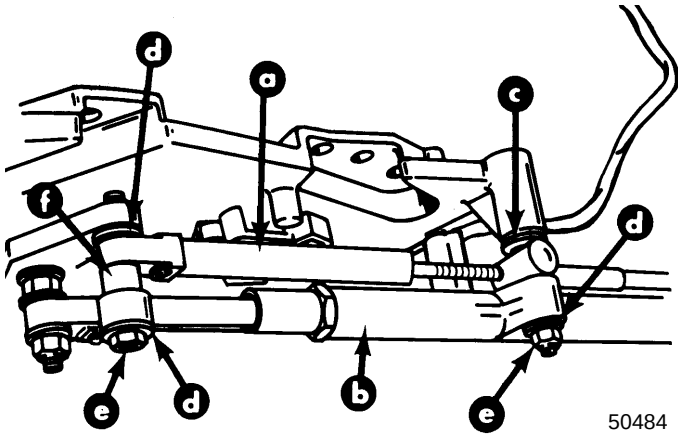

a - Remote Control Shift Cable
b - Shift Assist Assembly
c - Large I.D. Washer
d - Small I.D. Washer
e - Locknut - Tighten Until Bottomed then Back off 1/2 Turn
f - Spacer

Earlier Models (With Metal Shift Lever)

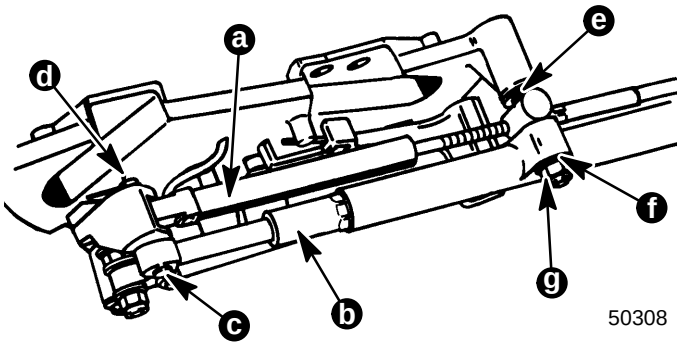

a - Remote Control Shift Cable
b - Shift Assist Assembly
c - Clevis Pin
d - Cotter Pin - Spread both Prongs
e - Large I.D. Washer
f - Small I.D. Washer
g - Locknut - Tighten Until Bottomed then Back off 1/2 Turn

Later Models (With Plastic Shift Lever)

IMPORTANT: If an extra long remote control shift cable is used, or if there are a large number of bends in remote control shift cable, or remote control has inadequate output travel, an additional adjustment may be necessary. Refer to Step 12.

provided by http://www.crowleymarine.com

12. Shift remote control into reverse gear, wide open throttle position while simultaneously rotating propeller shaft clockwise. Clutch should engage and cause propeller shaft to lock. If clutch does not engage, loosen adjustable stud on shift lever and move it upward in slot until clutch engages with reverse gear. Retighten stud. Shift remote control several times and stop in reverse to recheck shift cutout switch position. Roller must be centered.

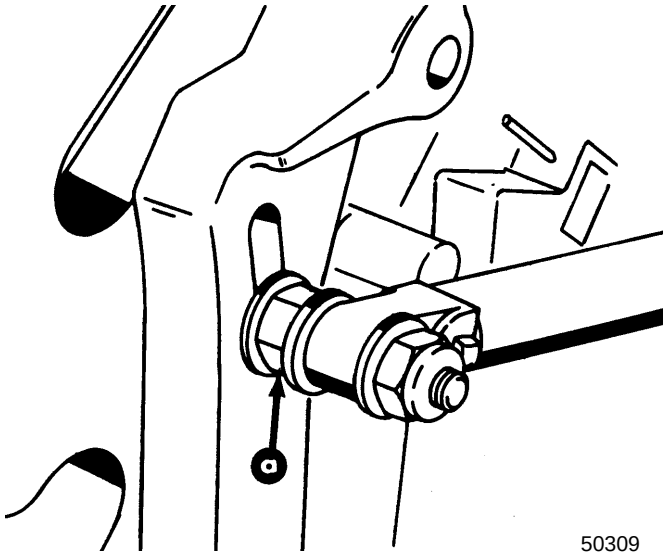

50309

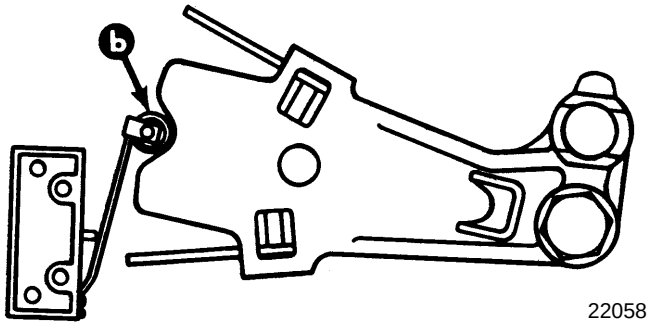

22058

a - Adjustable Stud
b - Shift Cutout Switch Roller

Checking Operation

1. Reconnect throttle cable(s), removed earlier.
2. Place boat in water and start engine. Check the following:
   a. Shift into forward and reverse gear, making sure that clutch engages before engine begins to accelerate.
   b. Accelerate engine in forward and reverse gear to ensure engine does not shut down.
   c. Check that shift cutout switch roller is centered in notch of shift cutout lever, with drive unit in forward and reverse gear.
   d. Shifting from “in gear position” to neutral, check to ensure drive unit is in neutral before remote control shift lever comes to neutral detent position.

provided by http://www.crowleymarine.com

SCALE

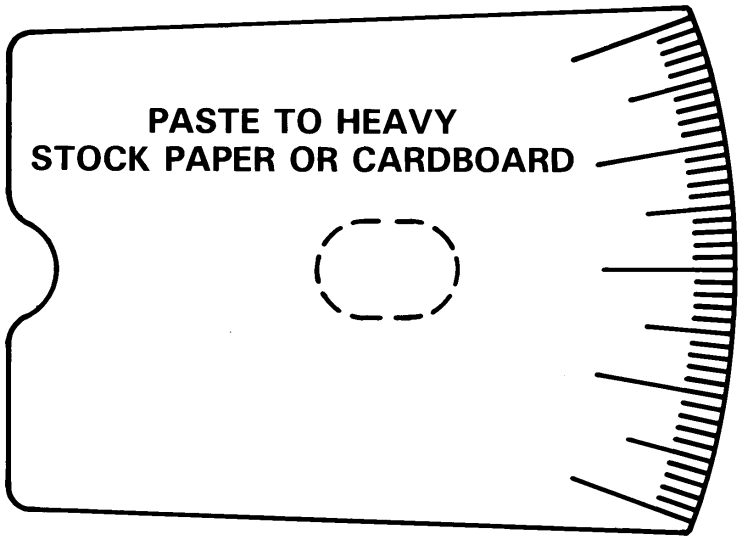

POINTER

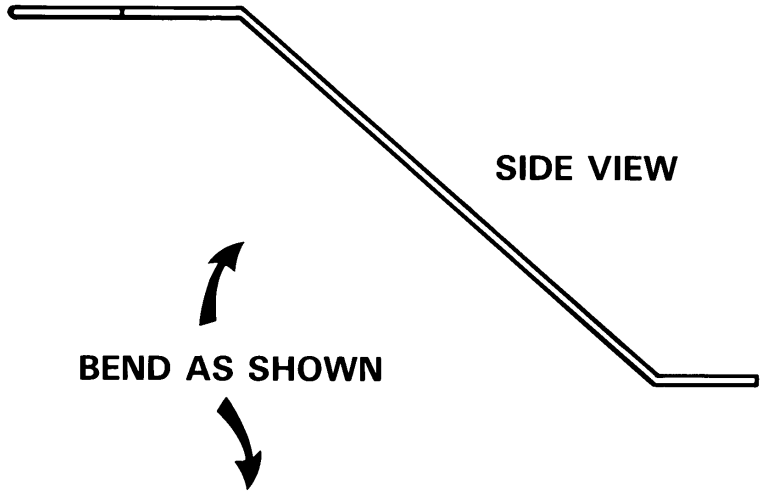

CUTOUT SWITCH ADJUSTMENT TOOL

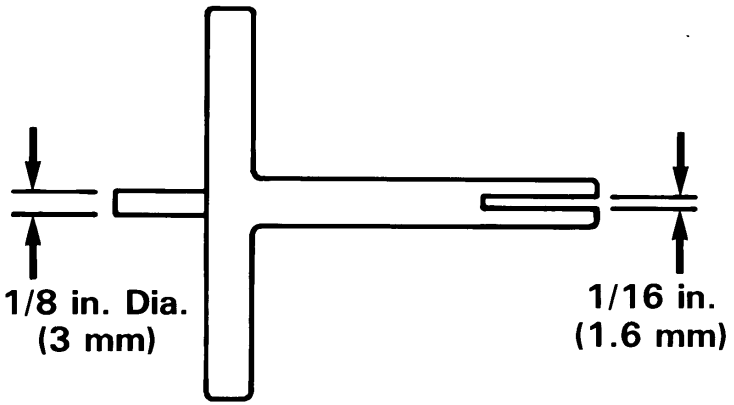

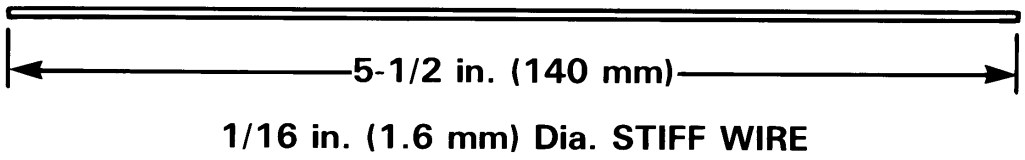

1/16 in. (1.6 mm) Dia. STIFF WIRE

50375

provided by http://www.crowleymarine.com