Service Bulletin

Bulletin No. 2011-14
Jet Drive No. 2011-02

Circulate to: ☐ Sales Manager ☐ Accounting ☑ Service Manager ☑ Technician ☑ Parts Manager

Air Compressor End Cap Supersession

Models Affected

Models Covered	Serial Number
Mercury/Mariner 1997 and newer 2.5L and 3.0L OptiMax	All through serial number break 1B885480
Sport Jet OptiMax Does not include 1.5L OptiMax	All through serial number break 0E436351

Scope

Worldwide

Situation

Mercury Marine has created a new dual row angle contact main bearing design air compressor. This new end cap assembly has a much stronger crankshaft and improved bearing load. The original design compressor and end cap are no longer available (NLA).

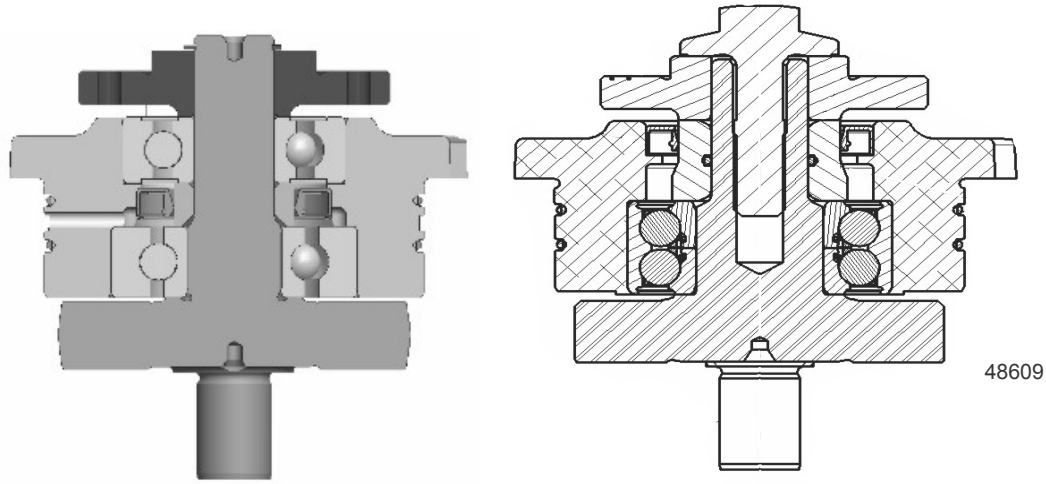

Old end cap assembly **New end cap assembly**

The new design will have the end cap assembly available for servicing the new air compressor. The end cap assembly is common for three compressor designs, the 2.5L with the mounting flange, the 3.0L with the top air inlet on the cylinder head, and the 3.0L with the side-mounted air inlet.

When an end cap assembly is needed for the original design air compressor a new air compressor will be needed.

THE INFORMATION IN THIS DOCUMENT IS CONFIDENTIAL AND PROTECTED BY COPYRIGHT AND IS THE PROPERTY OF MERCURY MARINE.

This document is provided for the sole and exclusive use of the original recipient as prescribed by Mercury Marine and may not be distributed or copied, digitally or otherwise, without the prior written consent of Mercury Marine.

provided by http://www.crowleymarine.com

Part Interchangeability

Old AC Assembly	New DRAC Assembly	Illustration
8M0050657	8M0060052 3.0L	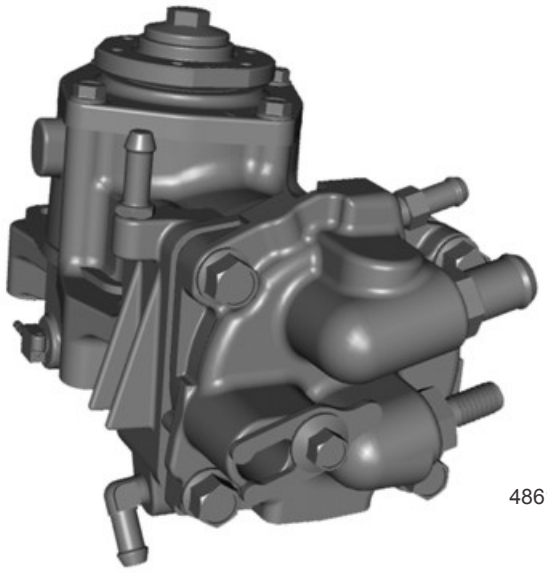 48617
8M0057463	8M0060053 2.5L	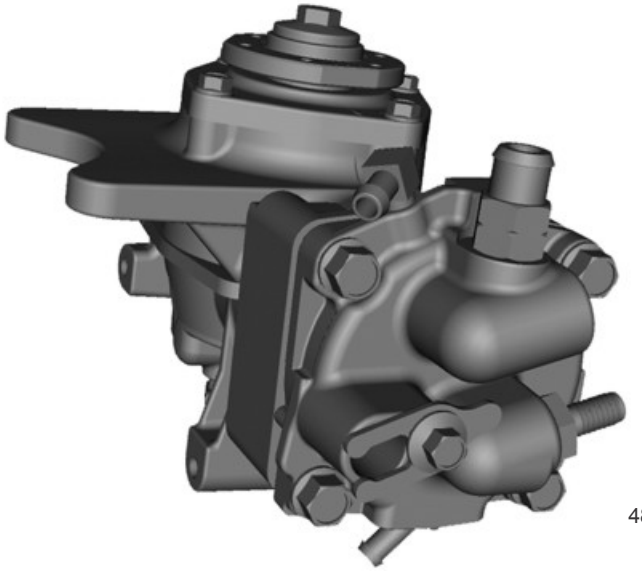 48618

THE INFORMATION IN THIS DOCUMENT IS CONFIDENTIAL AND PROTECTED BY COPYRIGHT AND IS THE PROPERTY OF MERCURY MARINE.

This document is provided for the sole and exclusive use of the original recipient as prescribed by Mercury Marine and may not be distributed or copied, digitally or otherwise, without the prior written consent of Mercury Marine.

provided by http://www.crowleymarine.com

Old AC Assembly	New DRAC Assembly	Illustration
8M0050655	8M0060051 250XS 3.0L	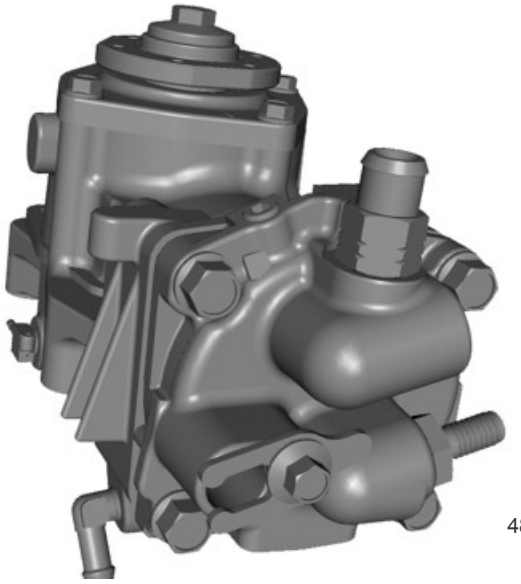 48619

Correction

When ordering part number 8M0050792 or 8M0050793 end cap assembly please order the appropriate replacement air compressor for the specific engine model.

THE INFORMATION IN THIS DOCUMENT IS CONFIDENTIAL AND PROTECTED BY COPYRIGHT AND IS THE PROPERTY OF MERCURY MARINE.

This document is provided for the sole and exclusive use of the original recipient as prescribed by Mercury Marine and may not be distributed or copied, digitally or otherwise, without the prior written consent of Mercury Marine.

provided by http://www.crowleymarine.com