Service Bulletin

Bulletin No. 2009-22R1

Circulate to: ☐ Sales Manager ☐ Accounting ☑ Service Manager ☑ Technician ☑ Parts Manager

2.0L/2.4L/2.5L Exhaust Diffuser Mounting Bolt and Torque Change

NOTICE
Revised July 2010. This bulletin supersedes the previous bulletin number 2009-22 December 2009.

Models Affected

NOTE: *This service bulletin covers two serial number groups. It identifies changes to the exhaust diffuser mounting bolts and their increased torque value.*

Mercury/Mariner Models Covered	Serial Number Or Year
All 115–200 HP V6 Engines 2.0L, 2.4L, 2.5L	1B803374 and Below
All 135–200 HP V6 Engines 2.5L	1B803380 and Above

Situation

A stronger bolt has been implemented with a revised torque value to prevent failures of the diffuser mounting to the driveshaft housing plate. Use this new bolt and torque value when servicing the 2.0L/2.4L/2.5L V6 engines.

Serial Number 1B803374 and Below

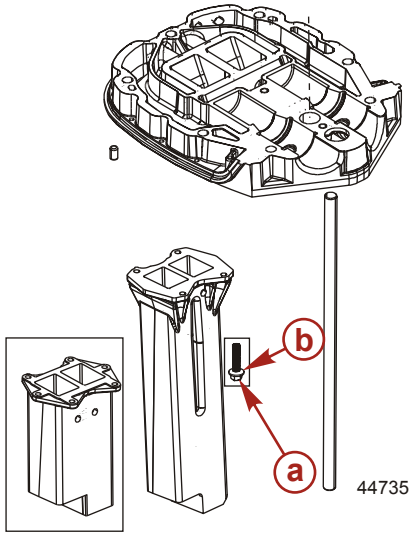

a - New bolt
b - Washer

Qty.	Description	Part Number
4	New bolt (0.250-20 x 1.0 inch)	10-8M0030694
4	Washer	12-35044

THE INFORMATION IN THIS DOCUMENT IS CONFIDENTIAL AND PROTECTED BY COPYRIGHT AND IS THE PROPERTY OF MERCURY MARINE.

This document is provided for the sole and exclusive use of the original recipient as prescribed by Mercury Marine and may not be distributed or copied, digitally or otherwise, without the prior written consent of Mercury Marine.

provided by http://www.crowleymarine.com

Description	Nm	lb-in.	lb-ft
New bolt torque value (0.250-20 x 1.0 inch)	30	265	22

Serial Number 1B803380 and Above

Starting with S/N 1B803380, all 2.5L V6 engines have a new driveshaft housing plate and exhaust diffuser mounting bolts. The longer bolt design increases the clamp load retention.

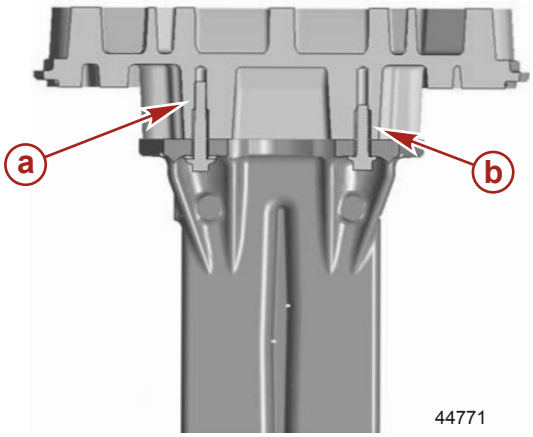

a - Longer bolt design (0.250-20 x 1.5 inch)
b - Short bolt (do not use)

Qty.	Description	Part Number
1	Driveshaft housing plate	8M0047679
4	Exhaust diffuser mounting bolt (0.250-20 x 1.5 inch)	8M0047146

Description	Nm	lb-in.	lb-ft
New bolt torque value (0.250-20 x 1.5 inch)	30	265	22

THE INFORMATION IN THIS DOCUMENT IS CONFIDENTIAL AND PROTECTED BY COPYRIGHT AND IS THE PROPERTY OF MERCURY MARINE.

This document is provided for the sole and exclusive use of the original recipient as prescribed by Mercury Marine and may not be distributed or copied, digitally or otherwise, without the prior written consent of Mercury Marine.

provided by http://www.crowleymarine.com