MERCURY MARINER

Service Bulletin

Bulletin No. 2008-09

Circulate to: ☐ Sales Manager ☐ Accounting ☑ Service Manager ☑ Technician ☑ Parts Manager

Ignition Coil Harness Service Replacement Connector P/N 854839T02

Models Affected

Models Covered	U.S. Serial Number	Belgium Serial Number
30 EFI FourStroke 3 Cylinder	0T980000–1B226999	0P325500–0P400999
40 EFI FourStroke 3 Cylinder	0T980000–1C049738	0P325500–0P515896
40 EFI FourStroke 4 Cylinder	0T980000 and above	0P325500 and above
40 Jet EFI FourStroke 4 Cylinder	1C051324 and above	
50/60 EFI FourStroke	0T980000 and above	0P325500 and above
75/90/115 OptiMax	0T801000 and above	
135/150/175 OptiMax	1B490866 and above	
175 Pro XS OptiMax	1B516339 and above	
200/225 OptiMax	1B504989 and above	
250 OptiMax	1B528615 and above	
225/250 Pro XS OptiMax	1B426561 and above	
150–250 V6 EFI 2-Stroke	0T409000 and above	

Wire Color Code Abbreviations

Wire Color Abbreviations				
BLK	Black		BLU	Blue
BRN	Brown		GRY	Gray
GRN	Green		ORN or ORG	Orange
PNK	Pink		PPL or PUR	Purple
RED	Red		TAN	Tan
WHT	White		YEL	Yellow
LT or LIT	Light		DK or DRK	Dark

THE INFORMATION IN THIS DOCUMENT IS CONFIDENTIAL AND PROTECTED BY COPYRIGHT AND IS THE PROPERTY OF MERCURY MARINE.

This document is provided for the sole and exclusive use of the original recipient as prescribed by Mercury Marine and may not be distributed or copied, digitally or otherwise, without the prior written consent of Mercury Marine.

provided by http://www.crowleymarine.com

Situation

A service replacement harness connector for the 5 pin ignition coils is now available. The harness will allow a damaged coil connector to be replaced rather than replacing the complete engine or coil harness assembly. The harness has bullet terminals installed on each wire and the kit includes the corresponding bullet connectors that can be installed on the engine or coil harness. The harness can also serve as a service tool, providing easy access for the test meter leads.

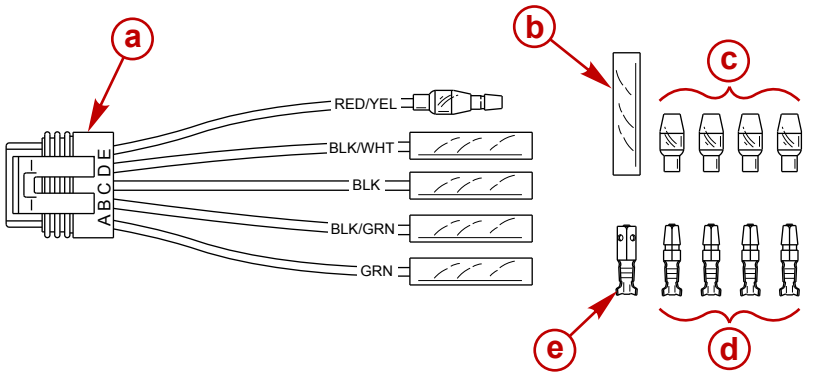

38439

a - Connector 5 pin coil
b - Female bullet connector insulator (1)
c - Male bullet connector insulator (4)
d - Male bullet connector (4)
e - Female bullet connector (1)

Two different 5 pin ignition coils are used on the outboards listed in this bulletin, coil base P/N 883778 and 879984. Following are the ohm values for both. Please note that the value between pin C and the secondary tower are different between the two coils.

NOTE: *Ohm values will vary depending on the style and type of ohmmeter used. If an ohm reading is outside of the below listed values, but the same readings are found on all or most of the ignition coils for that engine, it is likely there is nothing wrong with the coil, but just a variation due to the meter style and type.*

THE INFORMATION IN THIS DOCUMENT IS CONFIDENTIAL AND PROTECTED BY COPYRIGHT AND IS THE PROPERTY OF MERCURY MARINE.

This document is provided for the sole and exclusive use of the original recipient as prescribed by Mercury Marine and may not be distributed or copied, digitally or otherwise, without the prior written consent of Mercury Marine.

provided by http://www.crowleymarine.com

Examples: A test meter that uses a 1.5 volt battery versus a meter that uses a 9 volt battery as its power source will have different readings. An analog meter versus digital meter will have different readings. A high ohms value in the megaohm range may show as infinite or an open circuit on some meters.

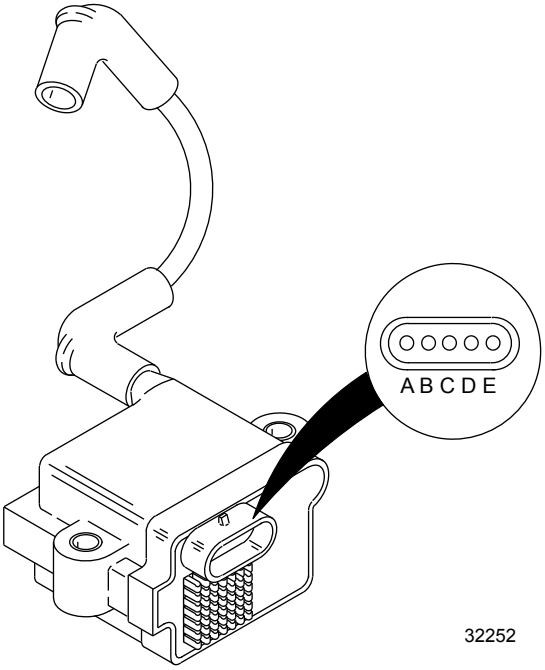

		Black Meter Lead					
		Secondary Tower	EST **Pin A**	EST Low **Pin B**	Secondary Low **Pin C**	Primary Ground **Pin D**	Battery + **Pin E**
Red Meter Lead	Secondary Tower	X	No continuity	No continuity	See note 1 below	No continuity	No continuity
	EST **Pin A**	No continuity	X	8500–12000 ohm	No continuity	29000–50000 ohm	11000–21000 ohm
	EST Low **Pin B**	No continuity	8500–12000 ohm	X	No continuity	39000–51000 ohm	21000–31000 ohm
	Secondary Low **Pin C**	See note 2 below	No continuity	No continuity	X	No continuity	No continuity
	Primary Ground **Pin D**	No continuity	20000–50000 ohm	31000–51000 ohm	No continuity	X	13000–23000 ohm
	Battery + **Pin E**	No continuity	11000–21000 ohm	21000–31000 ohm	No continuity	13000–23000 ohm	X

NOTE: *1. Coil base P/N 883778 ohms value between pin C and secondary tower should be 2–8 megaohms. Coil base P/N 879984 ohms value between pin C and secondary tower should be 850–1200 ohms.*
2. Coil base P/N 883778 ohms value between pin C and secondary tower should be an open circuit or very high resistance. Coil base P/N 879984 ohms value between pin C and secondary tower should be 850–1200 ohms.

THE INFORMATION IN THIS DOCUMENT IS CONFIDENTIAL AND PROTECTED BY COPYRIGHT AND IS THE PROPERTY OF MERCURY MARINE.

This document is provided for the sole and exclusive use of the original recipient as prescribed by Mercury Marine and may not be distributed or copied, digitally or otherwise, without the prior written consent of Mercury Marine.

provided by http://www.crowleymarine.com