MERCURY MARINER

Service Bulletin

Bulletin No. 2007-14

Circulate to: ☐ Sales Manager ☐ Accounting ☑ Service Manager ☑ Technician ☑ Parts Manager

Direct Injector Service and Test

Model Affected

Models Covered	Serial Number Or Year
1.5/2.5/3.0 Liter OptiMax 225/250 Pro XS	1998 and Newer S/N 0G590000 and Above

Situation

Mercury Marine has found that a high percentage of direct injectors returned under warranty have no problem found. The following information will help you diagnose and test direct injectors to determine if the injector needs replacement, cleaning or service.

THE INFORMATION IN THIS DOCUMENT IS CONFIDENTIAL AND PROTECTED BY COPYRIGHT AND IS THE PROPERTY OF MERCURY MARINE.

This document is provided for the sole and exclusive use of the original recipient as prescribed by Mercury Marine and may not be distributed or copied, digitally or otherwise, without the prior written consent of Mercury Marine.

provided by http://www.crowleymarine.com

Correction

ELECTRICAL TEST

Current service literature indicates that there should be no continuity between the direct injector connector pins and engine ground or the metal housing of the injector. Direct injectors that have an ohms reading from each connector pin to ground greater than 1000 ohms will operate correctly and do not need to be replaced. For best results, check the direct injector for continuity to ground when the injector is near operating temperature (engine warmed up).

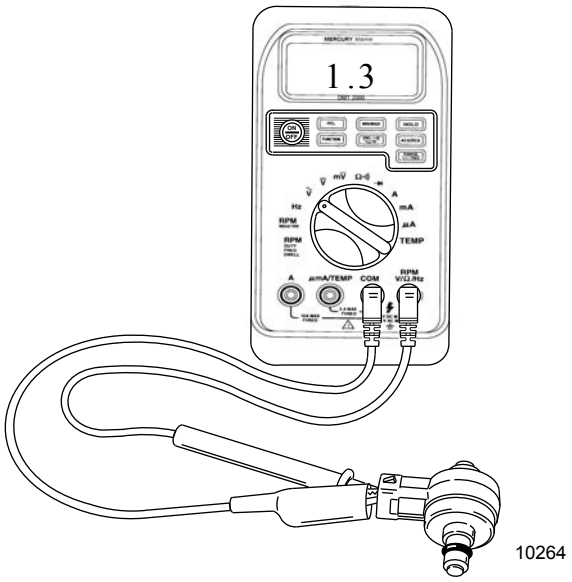

1.0 - 1.6 ohms between the two connector pins

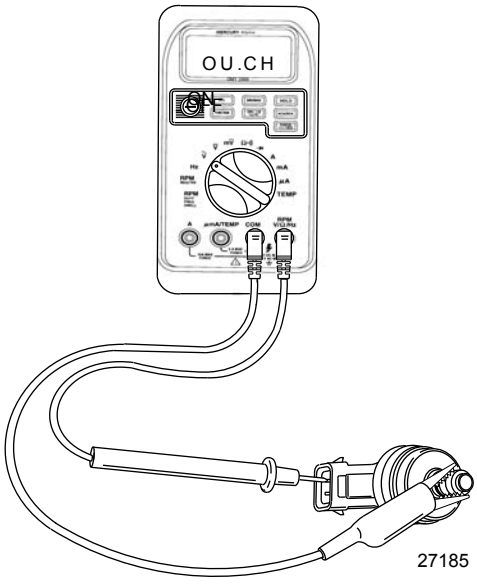

1000 ohms or greater between each pin and ground

THE INFORMATION IN THIS DOCUMENT IS CONFIDENTIAL AND PROTECTED BY COPYRIGHT AND IS THE PROPERTY OF MERCURY MARINE.

This document is provided for the sole and exclusive use of the original recipient as prescribed by Mercury Marine and may not be distributed or copied, digitally or otherwise, without the prior written consent of Mercury Marine.

provided by http://www.crowleymarine.com

NOTE: *Making resistance checks on a direct injector while still installed in the engine can be difficult. An easy and fast way to make resistance (ohms value) checks on direct injectors is to use service harness P/N 84-858781A2, shown below. This harness is normally used as a service replacement part for the direct injector connector if it becomes damaged, but also works well to make the required ohms test while the injector is in place between the cylinder head/block and fuel rail.*

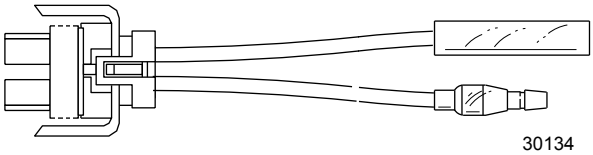

Service harness P/N 84-858781A2

PINTLE/TIP OPENING TEST

Correct injector pintle opening is important for good engine operation.

The pintle opening can be checked by using pintle test fixture P/N 91-899883A08 and dial indicator kit P/N 91-58222A1.

In most cases, if the pintle has reduced opening, it is caused by debris being trapped between the pintle and pintle seat. If pintle opening is below specifications, the injector should be replaced.

The injector and dial indicator are placed in the fixture so the shaft/plunger of the dial indicator rests on the end of the injector pintle. The injector is activated using a harness with a switch and 9-volt battery. The harness is included with the test fixture. The 9-volt battery is not included in the test fixture kit. Complete instructions for testing the pintle opening are included with the kit.

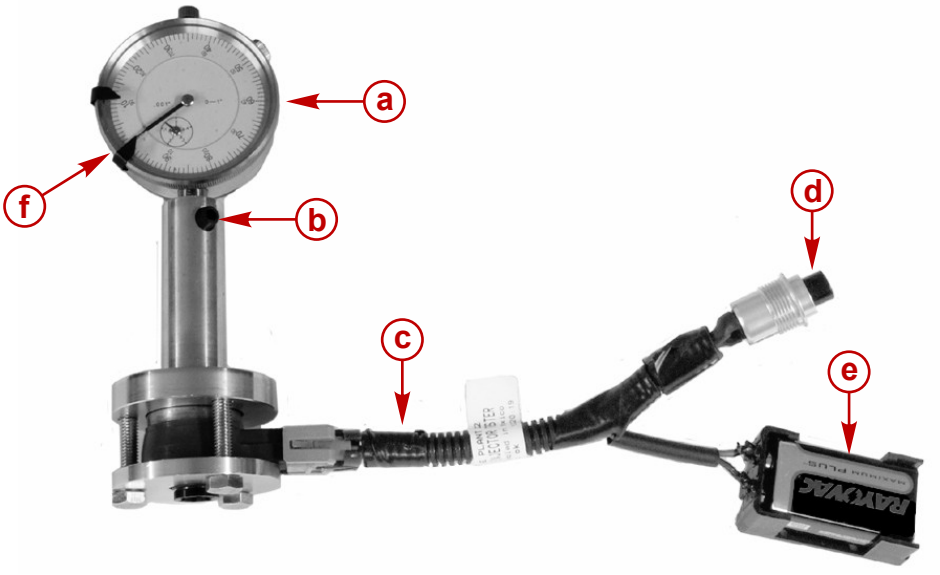

a - Dial indicator
b - Socket screw
c - Harness
d - Button
e - 9-volt battery installed
f - Dial indicator set at zero

Direct Injector Specification	
Direct injector pintle movement	0.020 - 0.031 mm (0.008 - 0.012 in.)

THE INFORMATION IN THIS DOCUMENT IS CONFIDENTIAL AND PROTECTED BY COPYRIGHT AND IS THE PROPERTY OF MERCURY MARINE.

This document is provided for the sole and exclusive use of the original recipient as prescribed by Mercury Marine and may not be distributed or copied, digitally or otherwise, without the prior written consent of Mercury Marine.

provided by http://www.crowleymarine.com

INJECTOR CLEANING

Place air injector in a clean solution of Power Tune Engine Cleaner P/N 92-858080K01 at room temperature. Place the valve body portion of the air injector in the cleaning solution (see picture following). Use a spacer or stack of washers to keep the injector positioned so only the valve body portion of the injector is in the cleaning solution. Soak the direct injector for 12 hours. When the injector is first placed in the solution, operate the injector using the pintle opening test fixture harness and switch assembly. Repeat this process after 6 and 12 hours of the soak period.

Tube Ref No.	Description	Where Used	Part No.
151	Power Tune Engine Cleaner	Used to clean air injector	92-858080K01

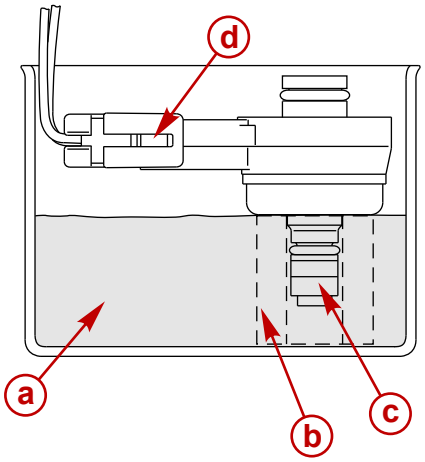

30138

a - Mercury engine power tune
b - Spacer to hold injector in place
c - Valve body portion of injector
d - Harness connection from pintle fixture harness

O-RING AND CARBON DAM

The condition of the carbon dam and O-rings on the direct injector may cause a misfire condition. Check for blow by past the carbon dam. If there is carbon on the injector housing side of the carbon dam, the carbon dam should be replaced.

THE INFORMATION IN THIS DOCUMENT IS CONFIDENTIAL AND PROTECTED BY COPYRIGHT AND IS THE PROPERTY OF MERCURY MARINE.

This document is provided for the sole and exclusive use of the original recipient as prescribed by Mercury Marine and may not be distributed or copied, digitally or otherwise, without the prior written consent of Mercury Marine.

provided by http://www.crowleymarine.com

Check the O-ring at the rear (fuel rail) end of the injector for cuts or damage. Both the O-rings and carbon dam are included in seal repair kit P/N 804875. See service manual for repair procedure.

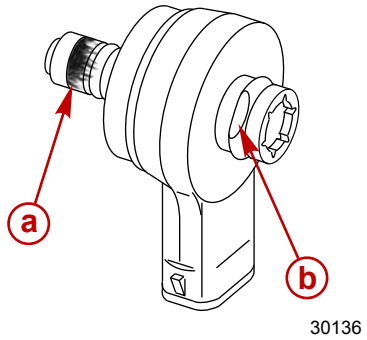

a - Carbon dam showing blow by
b - O-ring (fuel rail) end showing damage/cut

DIRECT INJECTOR LEAK TEST

- Attach gearcase leakage tool P/N FT8950 to the discharge side of the injector.

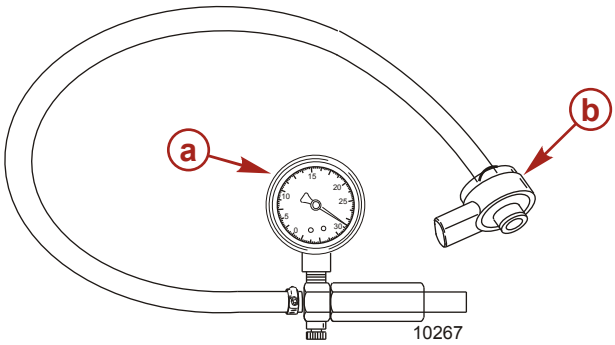

a - Gearcase leakage tool **b -** Direct injector

- Pump up the leakage tool to indicate 172.4 - 206.8 kPa (25 - 30 psi).
- Direct injector should not leak down more than 3.5 kPa (½ psi) in one minute.
- If injector does not meet the above specification, replace injector.

Leakage Tester Kit	FT8950
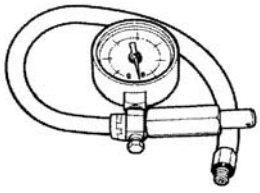 29497	Checks gear housing for leakage prior to filling with gear lubricant. Also used to pressurize the oil injection system.

NOTE: *Service literature will be updated with this information as manuals are revised.*

Warranty

The direct injector will be covered under warranty during the normal factory warranty for:

- Incorrect pintle opening
- Ohms values outside of specifications

THE INFORMATION IN THIS DOCUMENT IS CONFIDENTIAL AND PROTECTED BY COPYRIGHT AND IS THE PROPERTY OF MERCURY MARINE.

This document is provided for the sole and exclusive use of the original recipient as prescribed by Mercury Marine and may not be distributed or copied, digitally or otherwise, without the prior written consent of Mercury Marine.

provided by http://www.crowleymarine.com

- Blow by past carbon dam

The actual ohms reading, and/or pintle movement/distance should be included on the warranty claim, if the direct injector is being replaced under warranty.

NOTE: *Carbon build-up or cleaning to remove carbon build-up will* ***NOT*** *be covered under warranty.*

THE INFORMATION IN THIS DOCUMENT IS CONFIDENTIAL AND PROTECTED BY COPYRIGHT AND IS THE PROPERTY OF MERCURY MARINE.

This document is provided for the sole and exclusive use of the original recipient as prescribed by Mercury Marine and may not be distributed or copied, digitally or otherwise, without the prior written consent of Mercury Marine.

provided by http://www.crowleymarine.com