MERCURY MARINER

Service Bulletin

Bulletin No. 2005-11

Circulate to: ☐ Sales Manager ☐ Accounting ☑ Service Manager ☑ Technician ☑ Parts Manager

30-60 Horsepower FourStroke Voltage Regulator Replacement

Models Affected

Models Covered	Serial Number Or Year
Mercury/Mariner 30/40 3 Cylinder FourStroke	Model Year 2002 and 2003 0T438281 through 0T800906 Belgium 0P156468 through 0P269818
Mercury/Mariner 40/50/60 4 Cylinder FourStroke	Model Year 2002 and 2003 0T416659 through 0T800906 Belgium 0P156559 through 0P270043

Situation

Mercury Marine has received reports of voltage regulator failures on the above identified models. A failure of the voltage regulator will prevent the battery from maintaining a proper charge. Included in the observed failure modes is electrical arcing within the regulator, which can be an ignition source. Mercury Marine has made changes to the voltage regulator, and related components, to address this issue. The models identified above will be upgraded, at no cost to the customer, with a kit (described below), which includes a new voltage regulator.

Repair Identification

Inspect the engine for the installation of a fuse harness (c) required for the use of this new kit. If the fuse harness is installed, the bulletin has been performed on the engine and no further action is necessary.

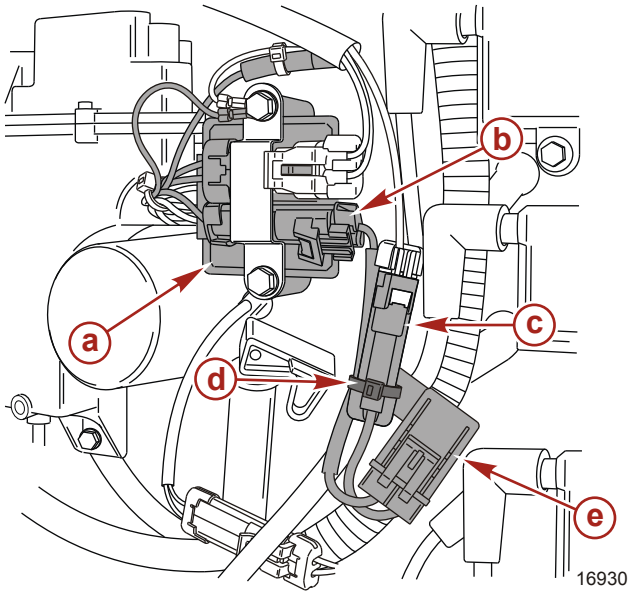

a - Voltage regulator
b - Fuse harness connector to voltage regulator
c - Fuse harness connector to wiring harness
d - Cable tie securing fuse and harness
e - 25 ampere fuse assembly

THE INFORMATION IN THIS DOCUMENT IS CONFIDENTIAL AND PROTECTED BY COPYRIGHT AND IS THE PROPERTY OF MERCURY MARINE.

This document is provided for the sole and exclusive use of the original recipient as prescribed by Mercury Marine and may not be distributed or copied, digitally or otherwise, without the prior written consent of Mercury Marine.

provided by http://www.crowleymarine.com

Correction

If the repair has not been previously completed, install the appropriate voltage regulator kit per the following instructions:

1. Disconnect the battery leads from the battery.
2. Remove the top cowl.
3. Remove the spark plug leads from the spark plugs.
4. Remove the bottom cowls.
5. Disconnect the voltage regulator wire connectors.
6. Remove the mounting screws and remove the voltage regulator.

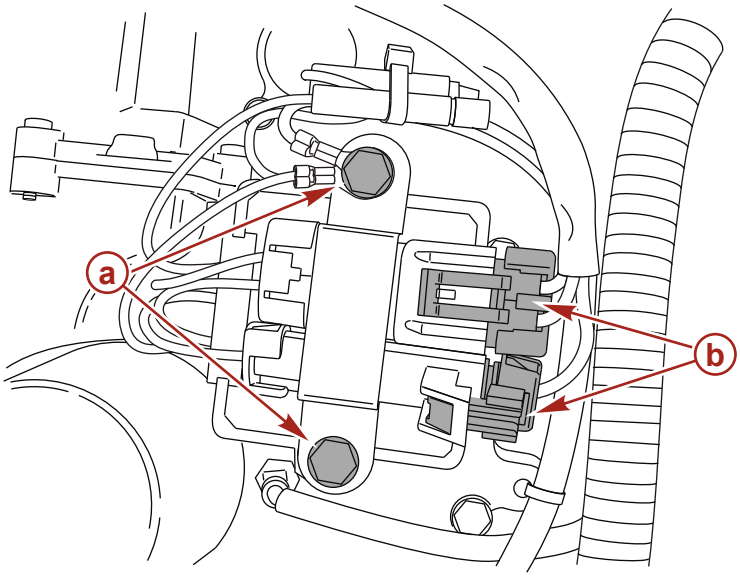

16931

a - Screws
b - Wire connectors

7. Remove the temperature sensor from the exhaust cover. (Retain for installation into the new exhaust cover.)
8. Remove the thermostat cover. (Retain for installation into the new exhaust cover.)
9. Remove the exhaust cover.
10. Properly clean the gasket surface of the exhaust chest.
11. Install the new exhaust cover with the gasket provided.
12. Install the new thermostat, thermostat cover, and new thermostat gasket to the new exhaust cover.

THE INFORMATION IN THIS DOCUMENT IS CONFIDENTIAL AND PROTECTED BY COPYRIGHT AND IS THE PROPERTY OF MERCURY MARINE.

This document is provided for the sole and exclusive use of the original recipient as prescribed by Mercury Marine and may not be distributed or copied, digitally or otherwise, without the prior written consent of Mercury Marine.

provided by http://www.crowleymarine.com

NOTE: *The installation of this kit requires the replacement of the engine exhaust cover. Refer to the appropriate service manual for removal and installation instructions.*

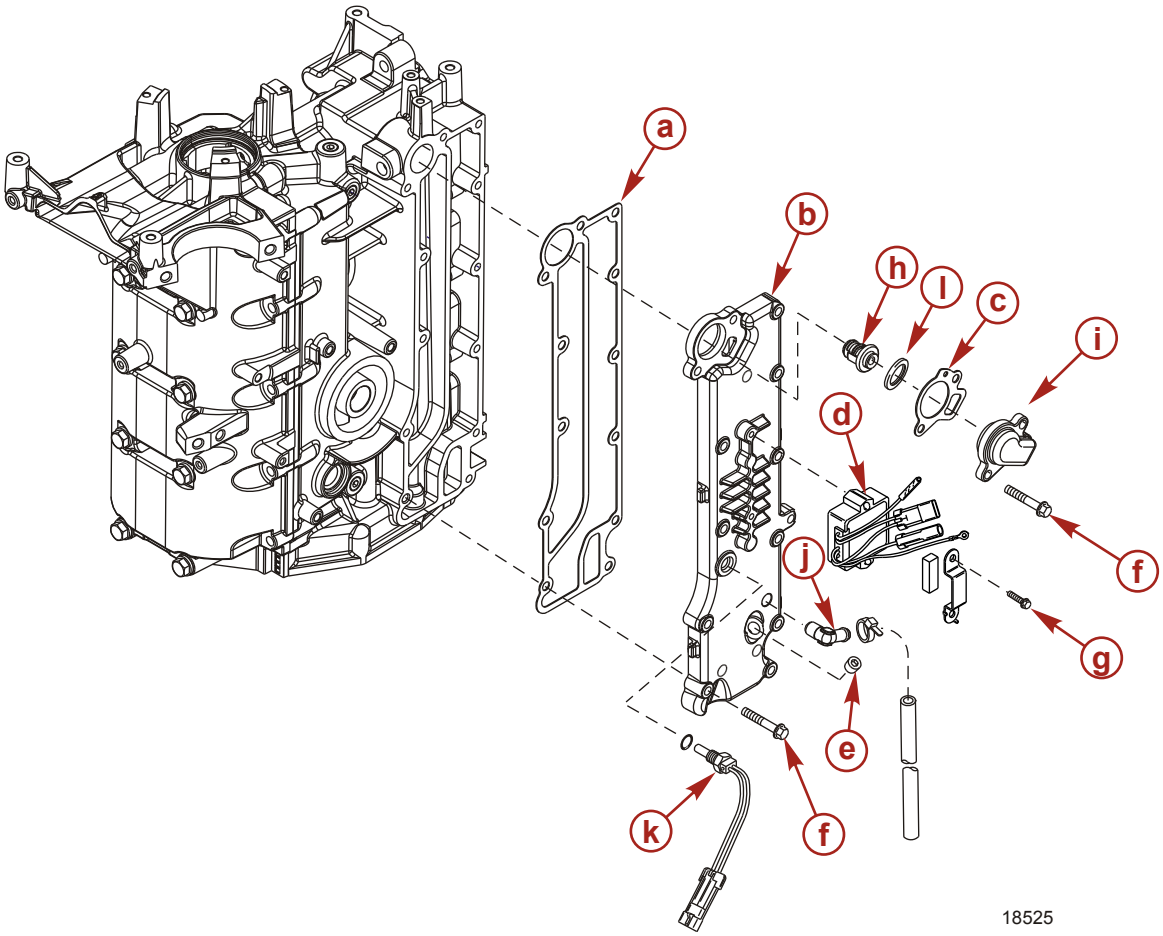

- **a -** Exhaust cover gasket
- **b -** Exhaust cover
- **c -** Thermostat cover gasket
- **d -** Voltage regulator
- **e -** Pipe plug (drive tight)
- **f -** Screw (M6 x 35) (12 each)
- **g -** Screw (M6 x 40) (2 each)
- **h -** Thermostat
- **i -** Thermostat cover
- **j -** Elbow
- **k -** Temperature sensor
- **l -** Thermostat gasket

Description		Nm	lb. in.	lb. ft.
Screw (M6 x 35)	**First**	6	53	
	Final	12	106	
Screw (M6 x 40)		8.5	75	

THE INFORMATION IN THIS DOCUMENT IS CONFIDENTIAL AND PROTECTED BY COPYRIGHT AND IS THE PROPERTY OF MERCURY MARINE.

This document is provided for the sole and exclusive use of the original recipient as prescribed by Mercury Marine and may not be distributed or copied, digitally or otherwise, without the prior written consent of Mercury Marine.

provided by http://www.crowleymarine.com

13. Torque the exhaust cover and thermostat cover screws in the proper torque sequence. Reference the correct sequence below.

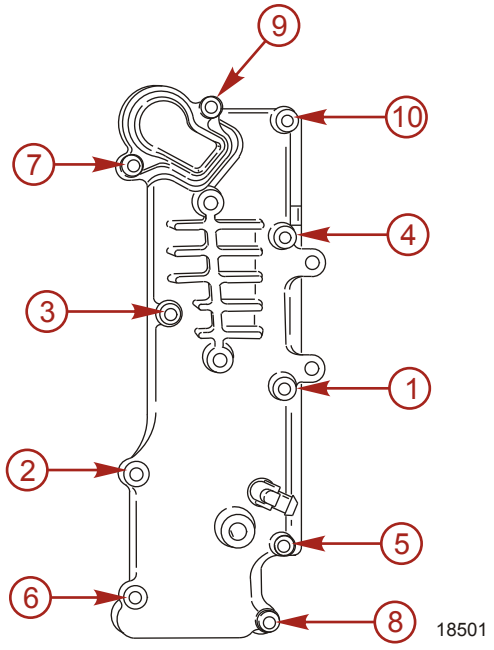

Three cylinder exhaust cover

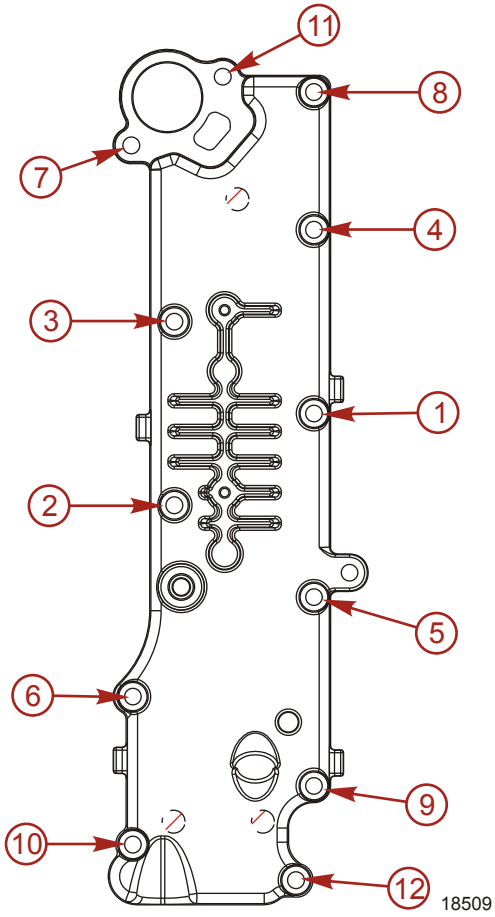

Four cylinder exhaust cover

Description		Nm	lb. in.	lb. ft.
Exhaust cover screw torque	**First**	6	53	
	Final	12	106	

14. Install the new plastic fitting and pipe plug to the exhaust cover (drive tight).
15. Install the temperature sensor. Torque to specifications.

Description	Nm	lb. in.	lb. ft.
Temperature sensor	1.7	15	

16. Install the new voltage regulator.

Description	Nm	lb. in.	lb. ft.
Voltage regulator/rectifier mounting screw torque	8.5	75	

THE INFORMATION IN THIS DOCUMENT IS CONFIDENTIAL AND PROTECTED BY COPYRIGHT AND IS THE PROPERTY OF MERCURY MARINE.

This document is provided for the sole and exclusive use of the original recipient as prescribed by Mercury Marine and may not be distributed or copied, digitally or otherwise, without the prior written consent of Mercury Marine.

provided by http://www.crowleymarine.com

17. Route and secure wiring as shown.

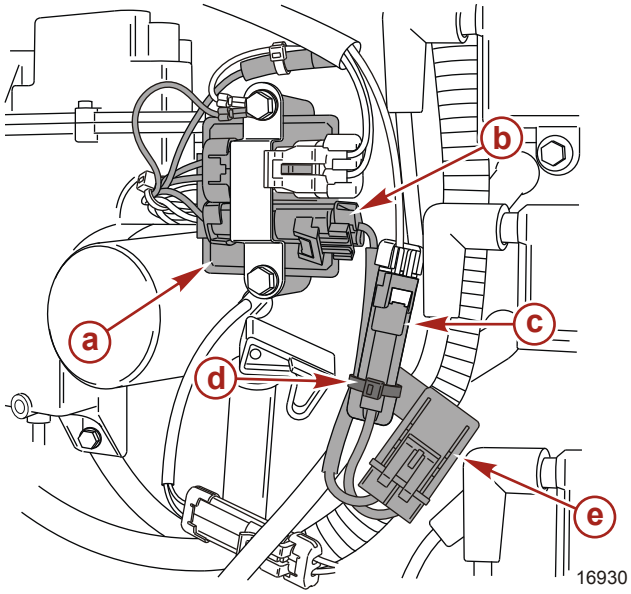

- **a -** Voltage regulator
- **b -** Fuse harness connector to voltage regulator
- **c -** Fuse harness connector to wiring harness
- **d -** Cable tie securing fuse and harness
- **e -** 25 ampere fuse assembly

18. Reinstall bottom cowls.
19. Reinstall spark plug leads.
20. Reconnect battery cables.
21. Test run outboard and inspect exhaust cover for leakage.
22. Reinstall the top cowl.

Parts Required

Qty. 1 of the appropriate voltage regulator kit:

Qty.	Description	Part Number
1	30/40 3 cylinder FourStroke carburetor or EFI	893640A01
1	40/50/60 4 cylinder FourStroke carburetor or EFI	893640A02

Dealer Parts Inventory

USA customers: Return any 883071T1 voltage regulators in your inventory using the Mercury Precision Parts UNDER 30 DAYS RETURNS PROGRAM. You may use the form on the back of any parts and accessories packing list. **Please note on the form that the return is part of Service Bulletin 2005-11.** All returns must be sent freight prepaid to:
Mercury Marine
Attn: Return Goods
W6250-20C Pioneer Road
Fond du Lac, WI 54935

Non-USA customers: Return any 883071T1 voltage regulator to the appropriate distribution center for credit. Follow the normal return parts procedure. Please make reference to Service Bulletin 2005-11.

Owner Notification

All registered owners within the affected serial number range will receive a letter from Mercury Marine. The letter will explain the situation and request that they contact their local dealer to set-up a time to have this repair performed.

Warranty

Mercury Marine will credit the dealer for the cost of parts and labor until September 30, 2008.

Complete the warranty claim listing:

- Outboard engine serial number
- Qty. 1 P/N 893640A01 or 893640A02

THE INFORMATION IN THIS DOCUMENT IS CONFIDENTIAL AND PROTECTED BY COPYRIGHT AND IS THE PROPERTY OF MERCURY MARINE.

This document is provided for the sole and exclusive use of the original recipient as prescribed by Mercury Marine and may not be distributed or copied, digitally or otherwise, without the prior written consent of Mercury Marine.

provided by http://www.crowleymarine.com

- 1.0 hour labor
- Warranty Flat Rate Code = SB10
- Part Code = 330
- Failure Code = 00

US and Canada

Complete/process the claim via MercNET or return a warranty claim form.

International

Follow instructions issued by the Marine Power International office or by an authorized Marine Power Distributor.

THE INFORMATION IN THIS DOCUMENT IS CONFIDENTIAL AND PROTECTED BY COPYRIGHT AND IS THE PROPERTY OF MERCURY MARINE.

This document is provided for the sole and exclusive use of the original recipient as prescribed by Mercury Marine and may not be distributed or copied, digitally or otherwise, without the prior written consent of Mercury Marine.

provided by http://www.crowleymarine.com