MERCURY MARINER

Service Bulletin

Bulletin No. 2005-03

Circulate to: ☐ Sales Manager ☐ Accounting ☑ Service Manager ☑ Technician ☐ Parts Manager

30-60 EFI FourStroke Fuel Cooler Hose Replacement

Models Affected

Models Covered	Serial Number Or Year
Mercury/Mariner 30 through 60 EFI FourStroke	1B036614 through 1B101240
Mercury/Mariner 30 through 60 EFI FourStroke	Belgium 0P340242 through 0P354961

Situation

The engine models listed above are at risk to have the fuel cooler water return hose damaged by the cowl mounted trim switch. Mercury Marine has installed protective sleeves on all production built product after serial number 1B101240 to prevent the trim switch from damaging the hose.

Correction

Install the new hose and protective sleeve to prevent this damage from occurring on the above mentioned models.

1. Remove top cowl.
2. Remove chaps.

THE INFORMATION IN THIS DOCUMENT IS CONFIDENTIAL AND PROTECTED BY COPYRIGHT AND IS THE PROPERTY OF MERCURY MARINE.

This document is provided for the sole and exclusive use of the original recipient as prescribed by Mercury Marine and may not be distributed or copied, digitally or otherwise, without the prior written consent of Mercury Marine.

provided by http://www.crowleymarine.com

3. Remove water hose (f) from the fuel cooler and engine block. This hose can be discarded.

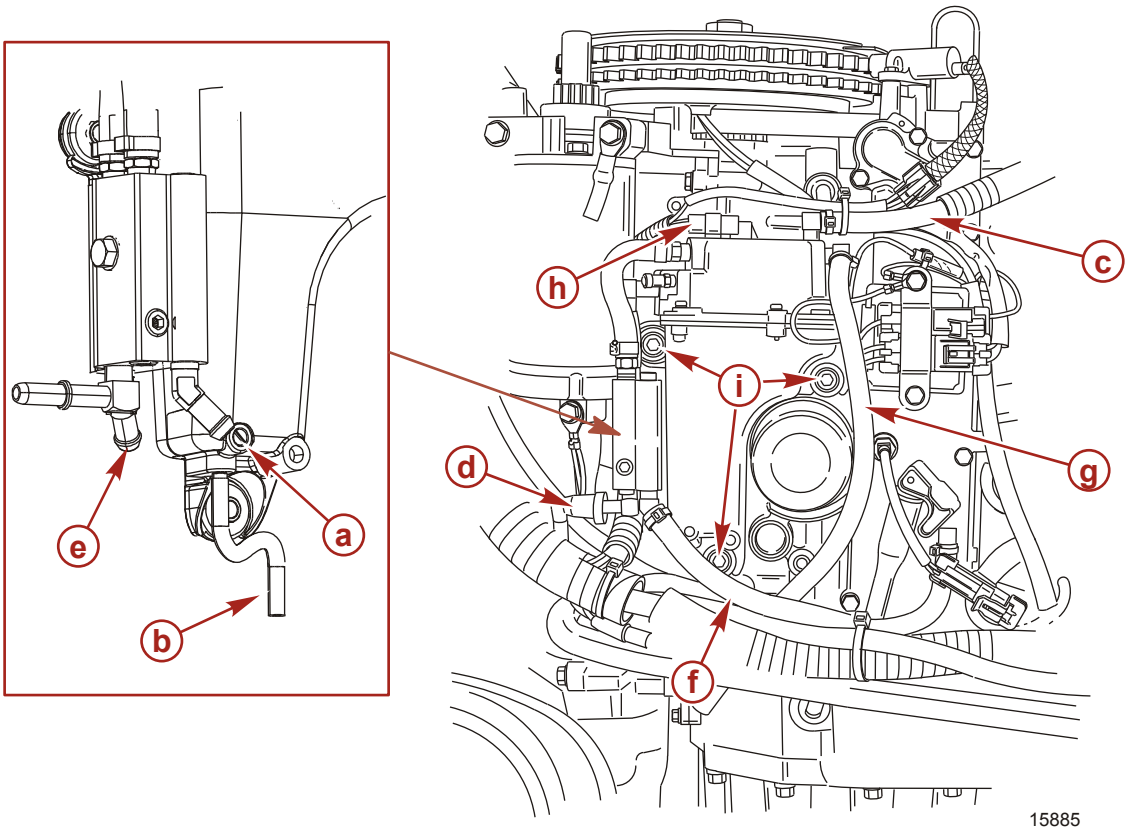

a - VST drain valve
b - VST drain hose
c - Fuel hose (mechanical fuel pump to VST)
d - High pressure fuel hose (fuel cooler to fuel distribution manifold)
e - Water hose (VST fuel cooler to mechanical fuel pump fuel cooler)
f - Water hose (exhaust cover to fuel cooler)
g - VST vent hose
h - High pressure fuel pump harness connector
i - Vapor separator mounting screws (3) M6 x 25

4. Cut 25.4 cm (10 in.) of bulk hose (32-830757130). This will be used as the replacement hose.
5. Install the protective sleeve (32-897777002) on the replacement hose. Be sure that the distance from the end of the hose to the beginning of the sleeve is approximately 18 mm (0.7 in.).

NOTE: *Lubrication may be required to slide the sleeve over the hose.*



a - 18 mm (0.7 in.)

THE INFORMATION IN THIS DOCUMENT IS CONFIDENTIAL AND PROTECTED BY COPYRIGHT AND IS THE PROPERTY OF MERCURY MARINE.

This document is provided for the sole and exclusive use of the original recipient as prescribed by Mercury Marine and may not be distributed or copied, digitally or otherwise, without the prior written consent of Mercury Marine.

provided by http://www.crowleymarine.com

6. Install the hose/protective sleeve assembly on the engine block and VST as illustrated below.

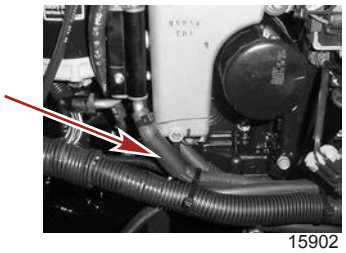
15902

7. Secure hose on fittings with cable ties.
8. Reassemble the lower and upper cowls on the engine.
9. Test run the engine for leaks.

Parts Required

Qty.	Description	Part Number
1	Sleeve	32-897777002
1	Hose	32-830757130
2	Cable tie	54-816311T

Repair Identification

Engines reworked at the factory will have an orange dot on the box's serial mat. If the engines are out of the box, inspect for the installation of the sleeve.

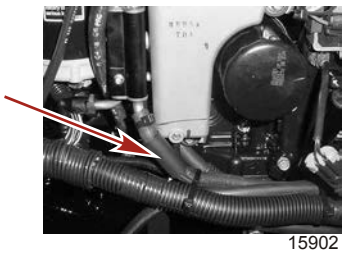
15902

Warranty

Mercury Marine will credit the dealer for the cost of parts and labor until May 31, 2008. Complete warranty claim listing:

- Outboard serial number
- Qty 1 32-897777002 Sleeve
- Qty 1 32-830757130 Hose
- Qty 2 54-816311T Cable tie
- 0.5 hour labor
- Warranty Flat Rate Code = SB05
- Part Code = 759
- Failure Code = 00

US and Canada

Complete/process the claim via MercNET or return a warranty claim form.

International

Follow instructions issued by Marine Power International office or by an authorized Marine Power Distributor.

THE INFORMATION IN THIS DOCUMENT IS CONFIDENTIAL AND PROTECTED BY COPYRIGHT AND IS THE PROPERTY OF MERCURY MARINE.

This document is provided for the sole and exclusive use of the original recipient as prescribed by Mercury Marine and may not be distributed or copied, digitally or otherwise, without the prior written consent of Mercury Marine.

provided by http://www.crowleymarine.com