MERCURY MARINER

Service Bulletin

Bulletin No. 2004-13

Circulate to: ☐ Sales Manager ☐ Accounting ☑ Service Manager ☑ Technician ☐ Parts Manager

Powerhead & Adaptor Plate Bolt Torque - 25 through 60 FourStroke

NOTICE
This bulletin supercedes Mercury/Mariner Service Bulletin 2002-21

Models Affected

Models	Serial Number Or Year
Mercury/Mariner 25 FourStroke	1998 to Present S/N 0G590000 and above
Mercury/Mariner 30/40 FourStroke	1999 to Present S/N 0G760300 and above
Mercury/Mariner 40/50/60 FourStroke	2001 to Present S/N 0T178500 and above
Belgium 25, 30/40, & 40/50/60 FourStroke	2001 to Present S/N 0P094500 and above

Situation

The 25, 30/40 and 40/50/60 FourStroke service manuals have an incorrect torque listed in various locations for the eight 8 mm x 110 mm powerhead bolts and the five 8 mm x 45 mm rear adaptor plate bolts. The incorrect torque listings in the manuals are both above and below the proper torque specification. New service manuals available to dealers will have the correct torque method and specifications outlined.

Correction

IMPORTANT: The correct torque sequence is very important for product durability.

THE INFORMATION IN THIS DOCUMENT IS CONFIDENTIAL AND PROTECTED BY COPYRIGHT AND IS THE PROPERTY OF MERCURY MARINE.

This document is provided for the sole and exclusive use of the original recipient as prescribed by Mercury Marine and may not be distributed or copied, digitally or otherwise, without the prior written consent of Mercury Marine.

provided by http://www.crowleymarine.com

The correct torque sequence for the eight 8 mm x 110 mm powerhead bolts is pictured below. Please note the 2 step torque procedure.

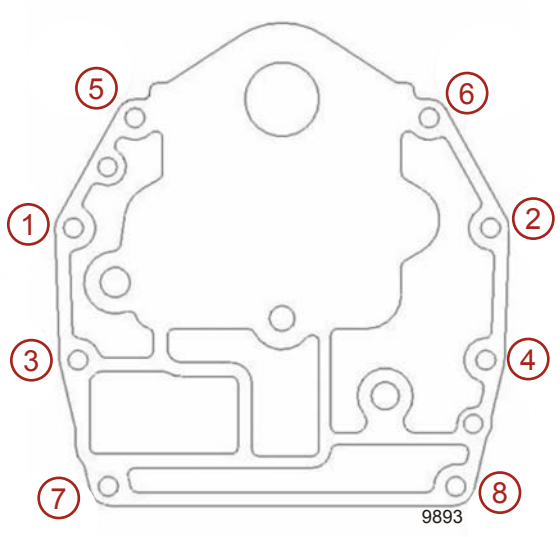

F25-60 Powerhead Bolt Torque Sequence

Description		Nm	lb. in.	lb. ft.
Powerhead bolts - M8 x 110	**First**	27		20
	Final	90° turn		

Torque the five 8 mm x 45 mm adaptor plate bolts to specification. The bolt must be dry.

Description	Nm	lb. in.	lb. ft.
Adaptor plate bolts	38		28

THE INFORMATION IN THIS DOCUMENT IS CONFIDENTIAL AND PROTECTED BY COPYRIGHT AND IS THE PROPERTY OF MERCURY MARINE.

This document is provided for the sole and exclusive use of the original recipient as prescribed by Mercury Marine and may not be distributed or copied, digitally or otherwise, without the prior written consent of Mercury Marine.

provided by http://www.crowleymarine.com