MERCURY MARINER

service bulletin

☐ WARRANTY INFORMATION ☑ SERVICE INFORMATION
☐ PARTS INFORMATION

Bulletin No. 2002-20
Jet Drive No. 2002-07

Circulate to: ☐ Sales Manager ☐ Accounting ☑ Service Manager ☑ Technician ☐ Parts Manager

Electric Fuel Pumps (Seized)

Models Affected

MERCURY/MARINER/JET DRIVES

V-6 150 – 200 HP, 2.5 Liter EFI
S/N 0G303046 Thru 0T408999

V-6 225 – 250 HP, 3.0 Liter EFI
S/N 0G129222 Thru 0T408999

210 Jet Drive
S/N 0E384500 Thru 0E406399

Situation

Engines that are placed in storage for extended periods of time with untreated fuel in the vapor separator are at risk of forming fuel gum. The accumulation of fuel gum has a tendency to seize electric fuel pumps, which typically results in replacement of an otherwise mechanically sound pump.

An electric fuel pump that is seized due to fuel gumming should be cleaned according to the procedure prescribed below, thus restoring the level of pump performance to pre-gum status.

THE INFORMATION IN THIS DOCUMENT IS CONFIDENTIAL AND PROTECTED BY COPYRIGHT AND IS THE PROPERTY OF MERCURY MARINE.

This document is provided for the sole and exclusive use of the original recipient as prescribed by Mercury Marine and may not be distributed or copied, digitally or otherwise, without the prior written consent of Mercury Marine.

Printed in U.S.A. - © 2002, Mercury Marine
provided by http://www.crowleymarine.com

Correction

- Drain the fuel from the engine's Vapor Separating Tank **(VST)** and electric fuel pump. Reinstall any plugs or hoses that were removed to drain the system.
- Remove the hose from the electric fuel pump outlet fitting and the fuel inlet fitting to the VST.
- Using a funnel and clear hose, replace the drained fuel with Fuel System Treatment and Stabilizer **(FSTS)** P/N 92-802875A1 or 92-802875Q1. The FSTS must be poured into the funnel slowly allowing time for it to pass through the VST needle valve. Fill the system until it will accept no more FSTS.

⚠ CAUTION

Do NOT use the Fuel System Treatment and Stabilizer Concentrate P/N 92-817529A1, 92-802876Q1, or 92-802876A1.

- Remove the funnel from the clear hose and connect the open end of the clear hose to the electric fuel pump outlet fitting. Secure both ends of the clear hose with sta-straps.
- Allow the fuel pump to soak in the FSTS for 25 minutes. If the pump has seized due to fuel gumming it should start to operate when the ignition key is turned to the ON position.
- After the pump has soaked for 25 minutes, turn the ignition key to the ON position. If the pump starts to operate, turn the ignition key ON and OFF several times allowing the pump to operate through its key ON run time each time the key is turned to the ON position. The key ON run time will vary from model to model. This will circulate the FSTS through the VST and pump to flush out any remaining fuel gum in the pump.
- Drain the FSTS out of the VST and electric fuel pump. Reconnect the fuel hoses to their normal locations and secure with the correct clamps as outlined in the service manual for the engine being serviced.

NOTE: *If the fuel pump had been seized due to fuel gumming it is likely that other parts of the fuel system, such as fuel injector or needle valves, are also gummed up. It is recommended that FSTS be added (one ounce for every one gallon of fuel) to the fuel supply for the next two or three tanks of fuel. FSTS also helps reduce spark plug fouling and carbon build up.*

THE INFORMATION IN THIS DOCUMENT IS CONFIDENTIAL AND PROTECTED BY COPYRIGHT AND IS THE PROPERTY OF MERCURY MARINE.

This document is provided for the sole and exclusive use of the original recipient as prescribed by Mercury Marine and may not be distributed or copied, digitally or otherwise, without the prior written consent of Mercury Marine.

provided by http://www.crowleymarine.com

V-6 EFI WITH ELECTRIC FUEL PUMPS INSIDE THE VST

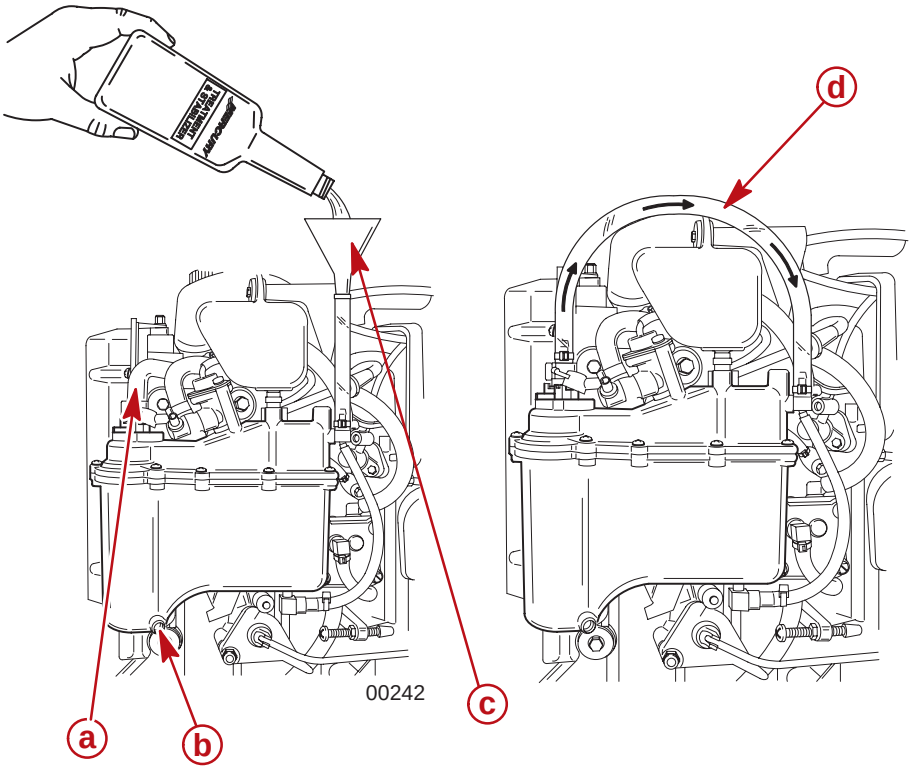

00242 00243

a - Fuel outlet electric pump
b - Drain plug VST
c - Funnel and clear hose
d - Clear hose connected to pump outlet to circulate FSTS

Parts Required

- One (1) small funnel (obtain locally)
- 18 inches of clear hose 5/16 ID (obtain locally)
- Sta-straps P/N 54-816311T (as required)
- Fuel System Treatment and Stabilizer 92-802875A1 (as required)

THE INFORMATION IN THIS DOCUMENT IS CONFIDENTIAL AND PROTECTED BY COPYRIGHT AND IS THE PROPERTY OF MERCURY MARINE.
This document is provided for the sole and exclusive use of the original recipient as prescribed by Mercury Marine and may not be distributed or copied, digitally or otherwise, without the prior written consent of Mercury Marine.

provided by http://www.crowleymarine.com