MERCURY MARINER

service bulletin

☐ WARRANTY INFORMATION ☑ SERVICE INFORMATION
☐ PARTS INFORMATION

Bulletin No. 2002-04

Circulate to: ☐ Sales Manager ☐ Accounting ☑ Service Manager ☑ Technician ☑ Parts Manager

▲ **= Revised May 2002. This bulletin supercedes the previous bulletin 2002-04 April 2002.**

Idle Relief Noise - 40 thru 60 Four Stroke

Models Affected

Mercury/Mariner

2002 40/50/60 (4 Cyl.) Four Stroke

Serial Number 0T477843 thru 0T538438

The adapter plate gasket (27-825251--3) that is installed between the adapter plate and the drive shaft housing on affected four-stroke outboards may create a vibration noise between 1500 and 3000 RPM. This noise is created by exhaust pressures in the adaptor plate idle system and causes the gasket to vibrate.

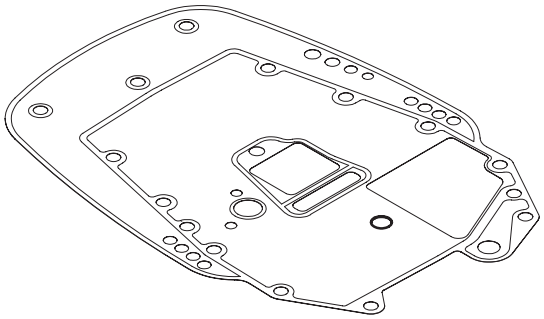

27-825251--3 Drive Shaft Housing to Adaptor Plate Gasket

This noise is most noticeable when the engine is running with all the cowlings on. It can occur with the engine in or out of gear. It may be described as a rattling, buzzing, pinging, or even a knocking sound. The noise may be louder as the engine warms up and it can change in tone and volume.

MHE INFORM4MON IN MHIL BOASMENMIL AONFIBENM4C4NB PROMEAMEB Y AOPYRIGHM4NB IL MHE PROPERMY OF MERASRY M4RINE.
This document is provided for the sole and exclusive use of the original recipient as prescribed by Mercury Marine and may not be distributed or copied, digitally or otherwise, without the prior written consent of Mercury Marine.

Printed in U.S.A. - © 2002, Mercury Marine
provided by http://www.crowleymarine.com

To verify that the noise is the adapter plate gasket vibrating, seal off the idle relief outlet at the back of the outboard. Care should be taken because this area of the drive shaft housing may be hot. With the idle relief plugged, the exhaust will not flow through the adapter plate idle relief passages and the noise will disappear. Be aware that when the idle relief is covered all exhaust gases will now pass through the propeller exhaust area. This will increase the bubbling noise from exhaust exiting through the water.

Correction

Replace the existing adapter plate to drive shaft housing gasket with a revised gasket 27-825251--6 or 27-825251--7 that has the additional hole. The additional hole is 11/32 inch (8.5 mm) diameter and located midway between the rear center and the rear starboard driveshaft housing bolt holes.

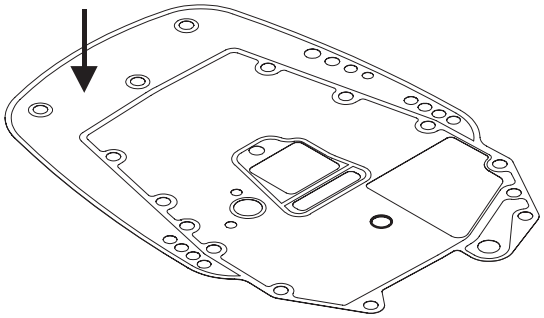

Location of Additional Hole

When reassembling, it is very, very important to torque the powerhead bolts to the proper torque and in the proper sequence.

Powerhead Bolt Torque:

▲ Torque 28 lb-ft. (38 Nm)

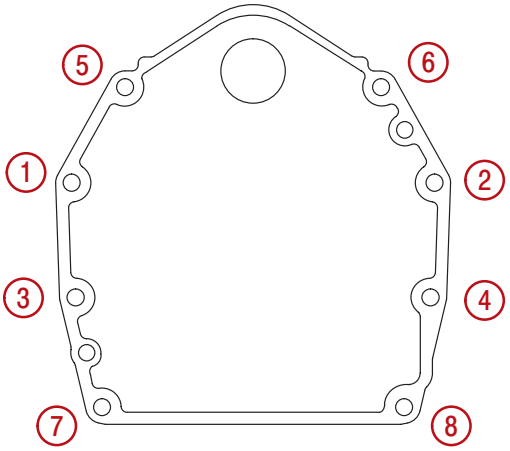

Torque Sequence

THE INFORMATION IN THIS DOCUMENT IS CONFIDENTIAL AND PROTECTED BY COPYRIGHT AND IS THE PROPERTY OF MERCURY MARINE.
This document is provided to be used for solely and exclusively by the original recipient and as prescribed by Mercury Marine and may not be distributed or copied, digitally or otherwise, without the prior written consent of Mercury Marine.

provided by http://www.crowleymarine.com

Parts Interchangeability

Adaptor plate to drive shaft housing gasket 27-825251--3 without the idle relief hole supersedes to 27-825251--6 and 27-825251--7, both with holes.

Service Parts Stock

Unused adaptor plate to drive shaft housing gasket 27-825251--3 without the idle relief hole can be returned for credit.

USA customers: Return any unused 27-825251--3 drive shaft housing gasket in your inventory using the Mercury Precision Parts UNDER 30 DAYS RETURNS PROGRAM. You may use the form on the back of any parts and accessories packing list. Please note on the form that the return is part of Outboard Service Bulletin 2002-04. All returns must be sent freight prepaid to:

Mercury Marine
Attn: Return Goods – Outboard Service Bulletin 2002-04
W6250-22A Pioneer Road
Fond du Lac, WI 54935

Non-USA customers: Return any unused 27-825251--3 drive shaft housing gasket in your inventory to the appropriate distribution center for credit. Follow the normal return parts procedure. Please make reference to Outboard Service Bulletin 2002-04.

Warranty

Mercury Marine will credit the dealer for the cost of parts and labor for one year from the issuance of this bulletin. Please note the month and year located at the lower left corner of the front page of this document.

Complete warranty claim listing:

- Outboard serial number
- Qty. 1 P/N 27-825251--6 or 27-825251--7 Gasket
- Two and three tenths (2.3) hours labor
- Warranty Flat Rate Code SB20
- Warranty Flat Rate Code SB03
- Part Code 449
- Failure Code 00

US & Canada - Tag and hold parts for 30 days after the warranty credit is received.

International - Hold parts for inspection/disposal by a Marine Power International technical representative.

MHE INFORM4MON IN MHIL BOAS MENMIL AONFIBENM4C4NB PROMEAMEB Y AOPYRIGHM4NB IL MHE PROPERMY OF MERASRY M4RINE.
This document is provided to be used for solely and exclusively by the original recipient and as prescribed by Mercury Marine and may not be distributed or copied, digitally or otherwise, without the prior written consent of Mercury Marine.

provided by http://www.crowleymarine.com