MERCURY
MARINER
MERCURY Sport Jet

service information

☑ ADVISORY
☐ BULLETIN

No. 2001-21

Circulate to: ☐ Sales Manager ☐ Accounting ☑ Service Manager ☑ Technician ☐ Parts Manager

Water Tube Guide Causing Engine Overheating - 40 (3 Cyl.) Big Foot & 40 thru 60 Four Stroke

Models Affected

MERCURY/MARINER

Four Stroke Models

1998 - 2000 50 (4 Cyl.) Big Foot

Serial Number 0G590000 thru 0T1784999

1999 - 2001 40 (3 Cyl.) Big Foot

Serial Number 0G760300 thru 0T408999

2001 - 2002 40/50/60 (4 Cyl.) Standard Gearcase & Big Foot

Serial Number 0T409000 thru 0T490425

The nylon water tube guide (54-828529) that is assembled in the drive shaft housing on affected four-stroke outboards may not be installed properly. If the water tube guide is not in place or has shifted out of the locking holes, the water tube coupler is no longer held down on the water pump housing. The water tube coupler may then work its way off of the water pump housing outlet. When the water tube coupler loses the seal to the water pump outlet, it will cause a loss of water supply to the engine.

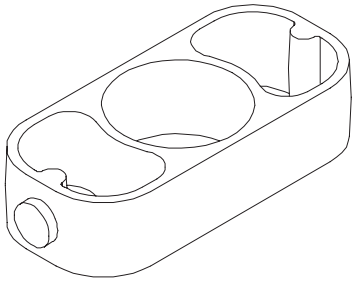

Water Tube Guide

Printed in U.S.A. - © 2002, Mercury Marine
provided by http://www.crowleymarine.com

The affected engines may overheat at idle and the tell tale stream may be weak or non-existent. The engine may not overheat at full throttle because of the higher water pump volume and the water tube coupler may have only moved slightly off of the water pump housing. At full throttle the tell tale may look normal.

If the engine overheats at all running conditions the water tube coupler may be completely off of the water pump housing. This would be indicated by no tell tale stream.

Inspection

Inspect the outboard to verify that the water tube guide is installed properly.

Without Gearcase Removal: With the lower cowls removed, proper installation can be verified by carefully observing that the water tube guide tabs are inserted fully into the holes on both sides of the drive shaft housing.

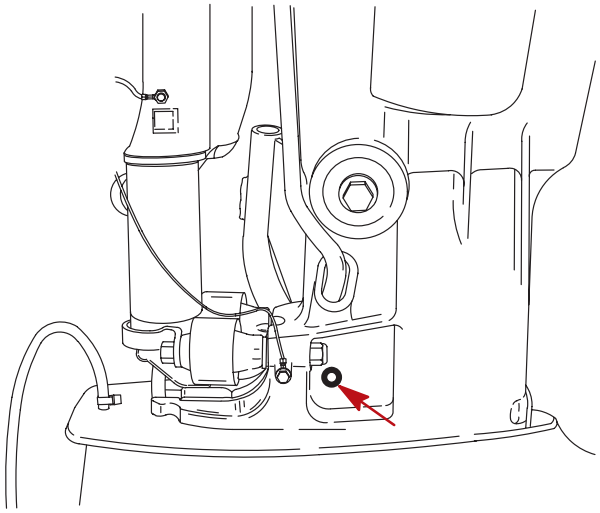

Location of Water Tube Guide Holes

With Gearcase Removal: Remove the gearcase from the drive shaft housing. Check that the water tube guide is in the proper place and the locating tabs are locked into the holes of the drive shaft housing.

provided by http://www.crowleymarine.com

Correction

Normal installation: Slip the guide over the water tube, slide the guide up the water tube into the drive shaft housing. When the guide is even with the locating holes in the drive shaft housing, turn the guide 90° until the tabs on the guide interlock fully in the holes. With the water tube guide installed properly, the water tube coupler will not be allowed to move up the water tube.

Two incorrect installations have been found:

1. Extra aluminum material in the holes of the drive shaft housing that prevents the guide tabs to be installed securely.
   - To fix this situation clean out the holes with a drill and a 1/4 in. (6.5 mm) drill bit.
2. Damaged guide tabs that can not be fully inserted into the drive shaft housing holes.
   - The only fix of this situation is to replace the water tube guide.

Service Tip: Secure the water tube coupler to the water pump outlet. Clean all grease and oil from the inside of the water tube coupler and the outside of the water pump housing outlet. Apply an instant adhesive such as Loctite 405 (obtain locally) to the inside of the coupler that will contact the water pump housing outlet. This will aid in holding the water tube coupler on the water pump housing outlet.

DO NOT glue both ends of the water tube coupler in place or later disassembly may not be possible.

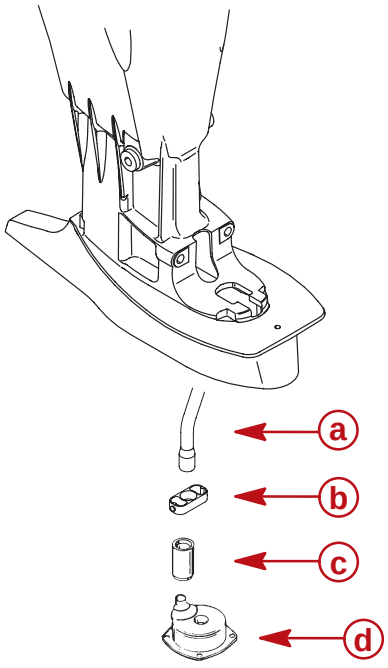

a - Water Tube
b - Water Tube Guide
c - Water Tube Coupler
d - Water Pump Housing

provided by http://www.crowleymarine.com

Parts Required

Quantity 1 Part Number 54-828529 Water Tube Guide.

Warranty

Mercury Marine will credit the dealer for the cost of parts and labor for one year from the issuance of this advisory or bulletin. Please note the month and year located at the lower left corner of the front page of this document.

Complete a warranty claim listing:

Outboard serial number

Qty. 1 P/N 54-828529 Water Tube Guide.

One (1.0) hour labor.

Warranty Flat Rate Code - SB10

Part Code - 611

Failure Code - 00

US & Canada - Tag and hold parts for 60 days after the warranty credit is received.

International - Hold parts for inspection/disposal by a Marine Power International technical representative.

provided by http://www.crowleymarine.com