MERCURY
MARINER
MERCURY Sport Jet

service information

☐ ADVISORY
☑ BULLETIN

No. 2001-14

Circulate to: ☐ Sales Manager ☐ Accounting ☑ Service Manager ☑ Technician ☑ Parts Manager

NOTICE

This is a revision of Outboard Bulletin 2001-14. Destroy original Bulletin 2001-14 June 2001 and insert the revised Bulletin 2001-14 September 2001, changes underlined.

Spark Plug Fouling, 3.0 Litre Optimax

Models Affected

MERCURY/MARINER/TRACKER
2001 Model 3.0 Liter Optimax
S/N 0T178500 Thru 0T408999

There have been reports of spark plug fouling on 3.0 Litre Optimax engines. The following system tests and product upgrades should be performed on affected engines. Dealers are to contact the OPTIMAX ASSISTANCE TEAM at 1-800-309-4743 or, complete and send a Quickfax form (90-821655 to 1-800-842-4550) to receive pre-authorization and a fuel rail/thermostat kit, and replacement ECM. Dealers in Canada needing assistance, should call 905-567-6372.

NOTE: *Dealer should have available the total run time on the engine's current ECM, when calling for approval.*

Owner Notification

A letter will be sent to every registered owner of an affected outboard. The letters will advise the owner to return their outboard to their selling dealer or any Mercury/Mariner authorized dealer for the system tests and/or product upgrades. To show our confidence in the product upgrade, and for the inconvenience on the part of the customer, Mercury Marine will restart the normal two-year limited warranty, effective upon confirmation that the upgrade has been completed.

Dealer Outboard Inventory

Affected outboards in dealer inventory MUST have the fuel rail/thermostat kit and re-calibrated ECM installed, prior to customer delivery of boats, (See parts required).

Printed in U.S.A. - © 2001, Mercury Marine
provided by http://www.crowleymarine.com

System Tests

NOTE: *New unused engines do* ***NOT*** *require system tests.*

SENSOR TESTS: Use the Digital Diagnostic Terminal (DDT), to check for proper operation of engine sensors, (MAP, TPS, Head, and Air temperature).

ENGINE TEMPERATURE: Using the DDT, check engine temperature on both cylinder heads. After warm up, temperature should be approximately 118 to 125° F (48 to 52° C). If below normal, replace thermostats (see instruction sheet supplied with kit). If engine comes up to normal temperature, no further action is required on the thermostats.

FUEL/AIR PRESSURE: Use the twin fuel pressure gauge P/N 91-852087A1/A2/A3 or 91-881834A 1 to check fuel and air pressure. With the original fuel rail still installed on engine air pressure should be 80 psi, and fuel 90 psi + or – 2 psi. NOTE: There will be a slight pressure increase using the new fuel rail supplied in the kit, air pressure should be 82 psi, + or – 2 psi. and fuel pressure 92 psi + or – 2 psi.

Correction (Product Up-Grade):

FUEL RAIL and THERMOSTAT KIT: Kit will include:

- Port fuel rail, with new air regulator for improved dampening characteristics
- Replacement 120° thermostats
- Hardware and instruction sheet to install rail and thermostats
- Six (6) new spark plugs

ELECTRONIC CONTROL MODULE (ECM): An improved ECM calibration is also required to prevent spark plug fouling, but is not included in the rail/thermostat kit. The ECM must be ordered separately. The ECMs listed below with a “T” in the part number represent ECMs returned from the field, tested and have the latest calibration installed. The re-calibrated ECM themselves will have an “R” designation on the part number label that is on the ECM. (Example: packaged P/N 859610T73 will be labeled 859610R73.) When stock of re-calibrated ECMs are not available you will be sent a new ECM without an “R” designation in the part number**. If the ECM has the correct suffix number the ECM has the correct calibration, and does not need to be replaced. (See parts required)**

NOTE: *All replacement ECMs will have the oil break-in activated.*

ENVIRONMENTAL PROTECTION AGENCY (EPA) LABEL

The latest 70 series part number ECMs increase idle speed from 550 to 575 RPM. This increase requires that the EPA label be changed. Two new EPA labels are packaged with the replacement ECM. The correct model year label must replace the current EPA label following the instructions packaged with the ECM.

To achieve optimal performance for both heavy and light boats, choose the correct ECM from (PARTS REQUIRED) below.

HEAVY BOAT: A heavy boat would typically be an Offshore boat with twin or triple engines, longer then 26 feet.

LIGHT BOAT: A light boat would typically be a Bass/Walleye, or single engine runabout, less then 26 feet.

provided by http://www.crowleymarine.com

Parts Required

Qty. One (1) upgrade kit P/N 884429A 4

Qty. One (1) ECM as required

P/N 859610T70 - - - 200 HP - - Light Boat

P/N 859610T72 - - - 200 HP - - Heavy Boat

P/N 859610T71 - - - 225 HP - - Light Boat

P/N 859610T73 - - - 225 HP - - Heavy Boat

Repair Identification

ENGINE OUT OF CARTON: Engines reworked at the factory, or dealer can be identified by the upgraded style air regulators on the port rail.

ENGINE IN CARTON: Engines reworked at the factory will have a GREEN dot on the engine carton, near the serial number label.

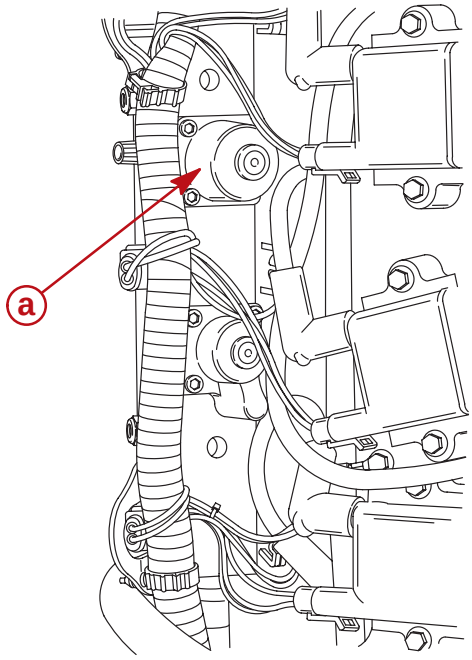

57980

a - Upgraded larger cast aluminum regulator attached with 4 allen screws

provided by http://www.crowleymarine.com

Warranty

Mercury Marine will credit the dealer for the cost of parts and labor for one year from the issuance of this advisory. Please note the month and year located at the lower corner of the front page of this Bulletin.

After pre-authorization is given, a pre-approved claim will be sent that includes the following information.

- Outboard serial number
- Qty. (1) one upgrade kit P/N 884429A4
- Qty. (1) one ECM as required (See parts required for the correct part number)
- Two and two tenth (2.2) hours labor for new engines that do not require system tests
- Two and seven tenth (2.7) hours labor for used previously run engines that require system tests
- Flat Rate Code: SB 20 and SB 02 for new engines that did not require system tests
- Flat Rate Code: SB 20 and SB07 for used engines that do require system tests
- Part Code: 736
- Failure Code: 00

US and Canada:

MERCNET DEALERS: Submit claim on MercNET system and return old fuel rail and ECM when requested with **Parts Return Rapid Claim.**

NON-MERCNET DEALERS: Complete/process claim, enclose claim with old fuel rail and ECM, and return to Mercury Marine.

ALASKA and HAWAII DEALERS: Complete/process claim, and hold parts for Technical Account Manager.

INTERNATIONAL: Follow instructions issued by Marine Power International office or by your distributor.

provided by http://www.crowleymarine.com

Mercury Marine
Marine Products and Services
W6250 Pioneer Road
P.O. Box 1939
Fond du Lac, WI 54936-1939 USA
Phone: 920-929-5000
www.mercurymarine.com

Dear Mercury Customer:

Our records indicate you are the owner of one or more 3.0 liter Mercury 200 or 225 horsepower OptiMax 2001 model year engines. We know you have a choice when powering your boat and we appreciate you choosing the Mercury OptiMax. We want to ensure that you are pleased and satisfied with your purchase.

We have identified a condition that exists on some of these engines that allows unacceptable running quality. Our testing has shown that an upgrade of specific components will correct this condition. Because of Mercury Marine's commitment to offering the best performance, quality and service in the industry, we want to apply this upgrade to your 3.0 liter Mercury 200 or 225 horsepower OptiMax 2001 model year engines, regardless of whether they exhibit running quality issues.

Mercury Marine will supply all the necessary parts and labor costs required to perform this upgrade to your engine. We have already forwarded a new service bulletin detailing the upgrade procedure to our dealers. When your servicing Mercury Outboard dealer has completed the upgrade, we will restart the full term of your two-year limited factory warranty, from the date that the component upgrade is completed. We want you to be happy with your purchase and we are committed to standing behind our product.

WHAT YOU SHOULD DO

Please contact your authorized Mercury Outboard dealer, preferably the dealer that sold you the engine, and make arrangements to have the necessary upgrade performed. Your dealer should refer to Mercury Service Bulletin 2001-14 for instructions. You will need to deliver your engine to the dealer and present this letter. If your engine is NOT experiencing any running difficulties, you may wish to wait until the yearly routine maintenance or storage is required to have this upgrade performed.

WHAT MERCURY WILL DO

Mercury Marine will reimburse the authorized dealer when the upgrade is performed in accordance with Service Bulletin 2001-14. We value your time and your business with us. To assure you of our confidence in our product and to give you peace of mind for the future, we will restart your two-year limited factory warranty on your OptiMax outboard when your dealer notifies us that your engine has received this upgrade. A new card reflecting the additional warranty period will then be mailed to your home.

Mercury sincerely apologizes for any inconvenience this situation has caused you or your family. We are taking this action, however, to ensure that your boating experience will be trouble-free and enjoyable. Should you have any questions regarding this issue, please call our OptiMax Assistance Team at 1-866-837-2227.

Sincerely,

Mercury Marine

provided by http://www.crowleymarine.com