MERCURY
MARINER
MERCURY Sport Jet
FORCE Outboards

service information

❑ ADVISORY
☑ BULLETIN

No. 2000-01

Circulate to: ☐ Sales Manager ☐ Accounting ☑ Service Manager ☑ Technician ☑ Parts Manager

Official Notification Federal Boat Safety Act Steering Link Rod Attaching Bolt V-6

Models Affected

MERCURY/MARINER

1999 225/250 HP, CARB/EFI -- XL, CXL, XXL, and CXXL
1999 200/225 HP, Optimax -- XL, CXL, XXL, and CXXL
S/N 0G870076 thru 0G960499

2000 135 thru 250 HP, CARB/EFI -- XL, CXL, XXL, and CXXL
2000 115 thru 225 HP, Optimax -- XL, CXL, XXL, and CXXL
S/N 0G960500 thru 0T103032

NOTE: *Exclude 20-inch (LONG) engines from the above serial number range. They do not require the link rod attaching bolt to be replaced. These engines use a different steering arm.*

The steering arm top attaching bolt may be at risk for failure. In order to avoid this risk a replacement bolt must be installed. See the “Parts Required” section below in order to identify the correct replacement bolt.

IMPORTANT: Bolts affected include standard steering arm bolt, supplied by Mercury Marine, or any steering arm bolt supplied by OEM/after market (cable or hydraulic) steering system. Only bolts used in steering arm hole (a) require replacement.

Printed in U.S.A. - © 2000, Mercury Marine
provided by http://www.crowleymarine.com

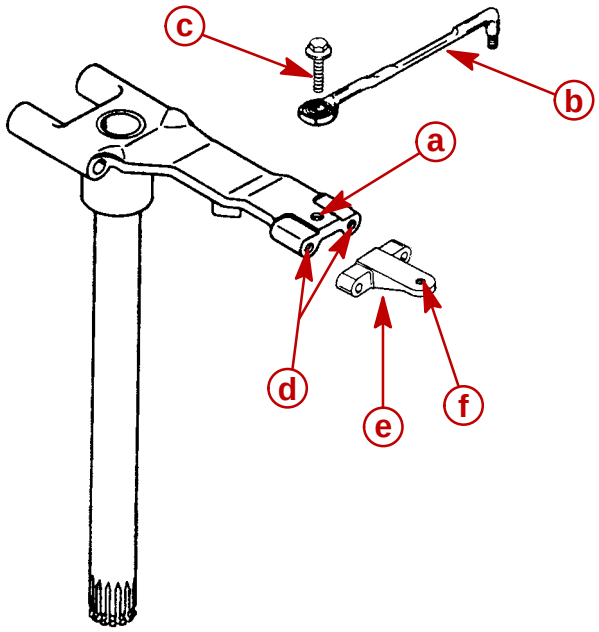

a - Steering arm top attaching hole, if used, bolt **MUST** be replaced
b - Steering link rod
c - Attaching bolt if connected to hole (a) **MUST** be replaced
d - Front attaching holes, if used, bolts **DO NOT** require replacement
e - Extension bracket
f - Attaching hole in extension bracket, if used, bolt **DOES NOT** require replacement

Owner Notification

A letter will be sent to every registered owner of an affected outboard. The letter will advise the owner to return their outboard to their selling dealer or any Mercury/Mariner authorized dealer for the replacement of the link rod attaching bolt.

Dealer Outboard Inventory

Affected outboards in dealer inventory when using attaching hole **(a)** MUST USE the replacement bolt when being installed/rigged on boats, (See Parts required).

Correction

Affected engines in the above serial number range using attaching hole **(a)** should have the link rod to steering arm attaching bolt replaced**.** Engines using OEM/after market steering systems may require various length bolts. Choose the correct bolt length from the following chart. Since the replacement bolts are not offered with shoulders, engines using Teleflex Clevis Kit P/N SA27314P with shoulder bolt, must replace the clevis with Quicksilver Clevis Kit P/N 70599A5, and also use the replacement bolt from the following chart.

NOTE: *Before proceeding with link arm bolt replacement confirm that the work has not been completed prior to receiving the engine. Look for the letters ARP on the head of the link arm attaching bolt, or refer to the Midas system under engine history.*

Service Parts Stock

Any inventory of standard attaching bolts P/N 10-14000 must be used on engines outside the above serial number and model range.

provided by http://www.crowleymarine.com

Parts Required

SCREW LENGTH "A"	THREAD LENGTH "B"	PART NUMBER
1.250 (31.75mm)	.800 (20.3mm)	10-849838
1.380 (34.92mm)	1.000 (25.4mm)	10-875273-138
1.500 (38.10mm)	1.000 (25.4mm)	10-875273-150
1.625 (41.28mm)	1.000 (25.4mm)	10-875273-162

Repair Identification

The more durable replacement bolt is identified with the letters ARP on the head of the bolt. No other repair identification is required.

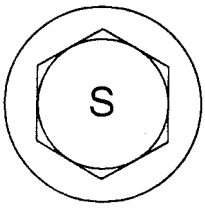

Standard Bolt

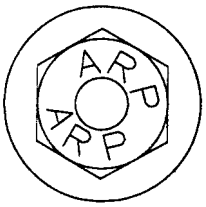

Replacement Bolt

Warranty

Replacement of the link rod to steering arm attaching bolt for product within the serial number ranges and product ranges identified above will have the replacement bolt installed under the product warranty.

- Complete warranty claim listing
- Outboard serial number
- 0ne (1) bolt and/or clevis kit as required.
- ½ hour (0.5) labor
- Flat rate code NJC
- Failure code 824-40

provided by http://www.crowleymarine.com

provided by http://www.crowleymarine.com

Mercury Marine
Marine Products and Services
W6250 Pioneer Road
P.O. Box 1939
Fond du Lac, WI 54936-1939 USA
Phone: 920-929-5000
www.mercurymarine.com

Dear Mercury Marine Customer:

Our records indicate that you are the owner of a Mercury Marine outboard included in a recall. Due to a manufacturing error, the steering arm top attaching bolt hole, may be incorrectly drilled at an angle. Under extreme steering torque conditions, this may cause extra strain on the link rod attaching bolt, which could result in bolt failure (steering disconnect).

WHAT YOU SHOULD DO

Contact your authorized dealer, preferably the one who sold you the engine, and make arrangements to determine if your engine needs to be repaired. The dealer will refer to Mercury Marine Service Bulletin 2000-1 for instructions. You must deliver your engine to the dealer and present this letter, the reverse side of which is a claim-form your dealer needs to send to us for reimbursement.

NOTE: *If your boat is in storage, you may want to wait until you remove it from storage to have this service performed.*

WHAT WE WILL DO

We will reimburse the authorized dealer for the replacement of the link rod attaching bolt in line with the service bulletin.

We apologize for any inconvenience this recall may have caused you. However, we have taken this action to assure your boating enjoyment and continued satisfaction with our product.

Sincerely,

Mercury Marine

provided by http://www.crowleymarine.com

MERCURY

WARRANTY CLAIM

DATE RECEIVED AM ___ PM ___ | DATE PROMISED AM ___ PM ___

ENGINE SERIAL NUMBER

CUSTOMER NAME	DEALER CODE	
ADDRESS	DEALER NAME	
CITY, STATE, ZIP	DEALER ADDRESS	
MODEL / SERIAL NUMBER	CITY, STATE, ZIP	
DATE OF SALE	ORDER NUMBER	LABOR RATE

PRODUCT (CHECK ONE ONLY)

- [X] OUTBOARD
- [ ] STERNDRIVE
- [ ] INBOARD
- [ ] INFLATABLES
- [ ] JET
- [ ] QUICKSILVER P&A (ATTACH RECEIPT)
- [ ] OTHER - SPECIFY _____

DATE FAILED

DATE REPORTED

DATE REPAIRED

HOURS USED

DESCRIPTION OF FAILURE: Steering Link Rod – Service Bulletin 2000-1

BOAT TYPE

H.I.N.

FAILURE CODE	FAILURE CODE DESCRIPTION	NOTE: WARRANTY CLAIM MUST BE RECEIVED WITHIN 30 DAYS OF REPAIR DATE TO BE CONSIDERED FOR APPROVAL.	PRE-AUTHORIZATION NUMBER	ENTER DATE
824-40	Steering Link Rod-Fix Pro			

REPAIR PARTS IDENTIFICATION

QTY	PART NUMBER	PART DESCRIPTION	LIST PRICE	TOTAL
1		Bolt and/or Clevis Kit		
		(Please fill in correct part #)		

I HEREBY AUTHORIZE THE ABOVE REPAIR WORK TO BE DONE AND GRANT YOU AND/OR YOUR EMPLOYEES PERMISSION TO OPERATE THE UNIT AS NECESSARY FOR TESTING AND/OR INSPECTION.

CUSTOMER AUTHORIZATION

LABOR PERFORMED PER FLAT RATE MANUAL

CODE	DESCRIPTION	HOURS	DOLLARS
NJC		0.5	

TOTAL LABOR	
TOTAL PARTS	
SUB TOTAL	
TAX	
SUBLET LABOR (RECEIPT ATTACHED)	
FREIGHT (ATTACH RECEIPT IF OVER $10.00)	
GRAND TOTAL	

ATTENTION

provided by http://www.crowleymarine.com