MARINER OUTBOARDS

MERCURY OUTBOARDS

service bulletin

No. 97-7

Gearhousing Modification

All Models

Failure analysis of warranty returned gearhousings has identified numerous cases where gearhousing modifications were the direct or indirect cause of gearhousing failure. Modifications include nose cones, low water pick-ups, water intake modifications and modifications to the cavitation plate or skeg. It has been Mercury Marine's policy, in the past, that warranty would be honored on modified gearhousings if the modifications did not cause or contribute to the failure.

This policy has caused difficulty when factory failure analysis determines that modifications have caused or contributed to the failure and the warranty claim is rejected back to the dealer. The dealer is put in the difficult, and often unsuccessful, position of trying to collect for the repairs from the customer.

Based on the amount of failures caused by modifications, Mercury Marine has changed this policy and will no longer honor warranty on modified gearhousings.

As of the August 1, 1997, any gearhousing modified with other than an accessory sold by Mercury Marine, will not be eligible for warranty or Q-Guard product protection.

In addition, any other component or assembly, determined to have failed as a result of gearhousing modification, such as powerhead, engine mounts, driveshaft housing, etc., will not be covered under warranty or Q-Guard.

Paragraph III, part 5 of the limited warranty notes that warranty does not apply when the product is altered. Dealers should make customers aware of this policy and the risks that the customer assumes when making gearhousing modifications. Modified gearhousings returned to Mercury Marine for warranty or Q-Guard consideration, will be returned to the dealer.

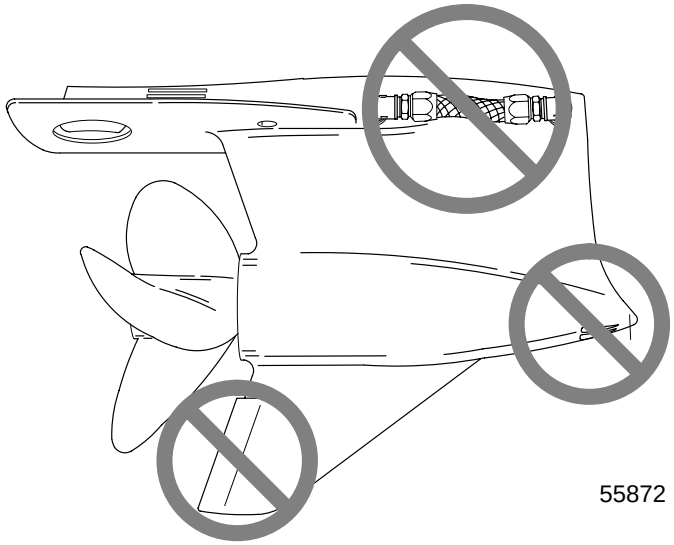

55872

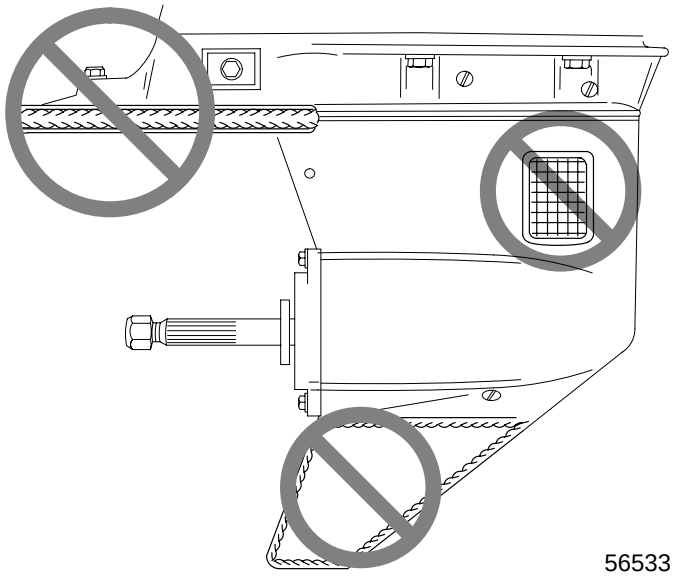

56533

provided by http://www.crowleymarine.com