MARINER OUTBOARDS

MERCURY OUTBOARDS

service bulletin

No. 96-14

Counter Rotation Gearcase Installation – 135 thru 250

Mercury Marine field failure reports show occasional gearcase failures due to the motor being run in reverse instead of forward gear. These failures have been attributed to installation errors by using the wrong propeller, using the wrong control box, the shift cables being installed wrong inside the control box, or the gearcase is installed on the opposite motor when being serviced or winterized.

It is important to use the proper control box and install the shift cable properly for the correct rotation.

If the counter rotation outboard is rigged similar to a standard rotation outboard or if a standard rotation outboard is rigged similar to a counter rotation outboard, the reverse gear and bearing in the gearcase must function as forward gear. The reverse gear/bearing is not designed to carry the sustained loads that are generated when running under constant high rpm and thrust conditions.

Counter Rotation Shift

On counter (left hand) rotation outboards, the shift guide block moves aft for the forward gear and forward for the reverse gear. This is opposite motion compared to a standard (right hand) rotation outboard.

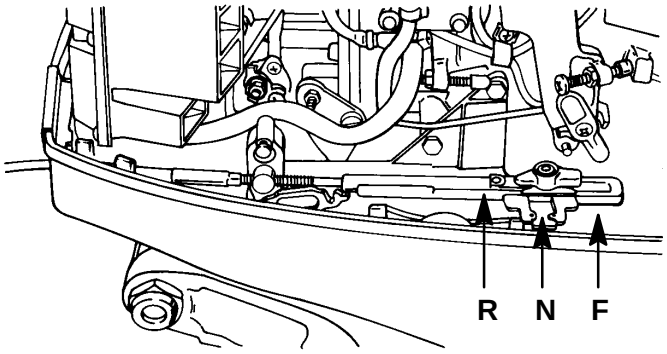

51782

F - Forward
N - Neutral
R - Reverse

Figure 1. Counter Rotation Shift

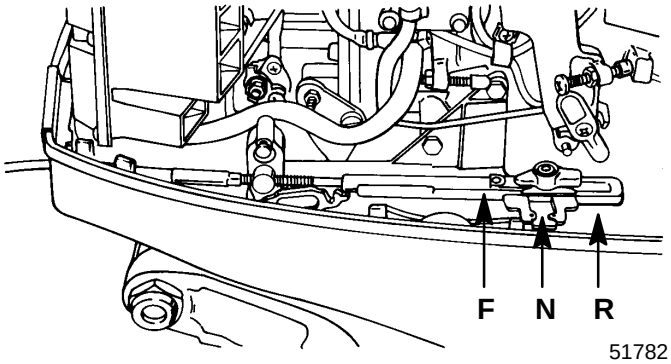

51782

F - Forward
N - Neutral
R - Reverse

Figure 2. Standard Rotation Shift

provided by http://www.crowleymarine.com

Counter Rotation Gearcase Identification: Counter rotation (left hand) gearcases can be identified by a “L” stamped into the end of the propeller shaft, and a counter rotation decal is placed on the rear engine cowl. This decal is shipped inside the engine mounting packet on all counter rotation motors and is placed on the cowl by the installer of the outboard.

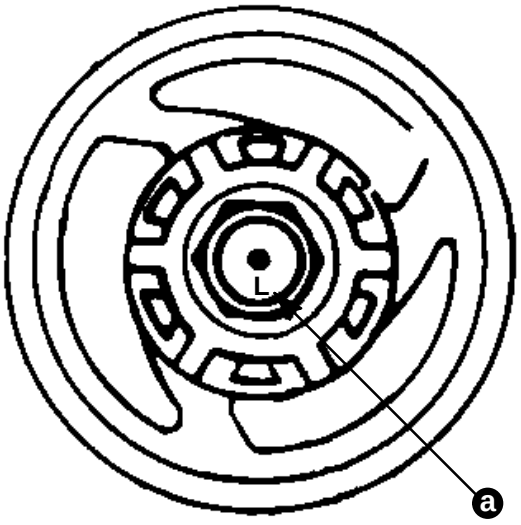

a - “L” Stamp

Figure 3. Counter Rotation Prop Shaft Stamp

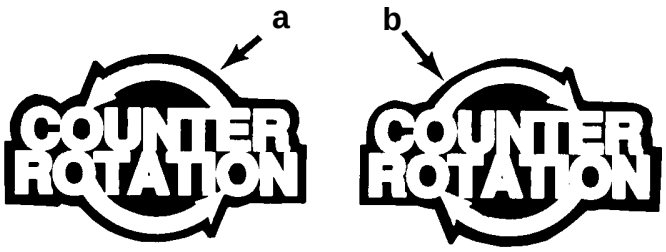

a - Counter Rotation Decal (Left-Hand Rotation Outboard)
b - Counter Rotation Decal (Right-Hand Rotation Outboard)

Figure 4. Decal Location

Propeller Identification

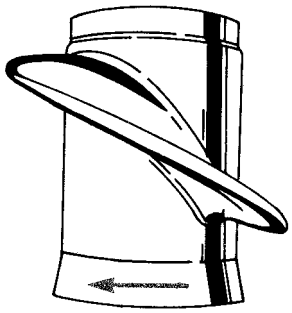

COUNTERCLOCKWISE OR LEFT HAND

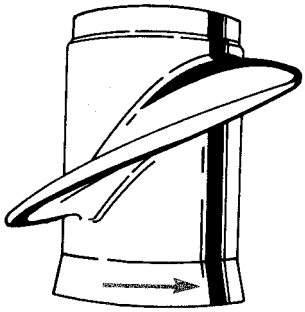

CLOCKWISE OR RIGHT HAND

Figure 5. Shows how to identify a standard rotation propeller verses a left hand propeller

Remote Controls

The proper control box must be used. To allow the gearcase to shift opposite for counter rotation, the following can be used for counter rotation gearcase.

NOTE: Installation instructions or a service manual should be used for proper cable installation.

provided by http://www.crowleymarine.com

Counter Rotation Control Boxes



NO
STANDARD SINGLE
LEVER SIDE MOUNT



NO
DELUXE SINGLE
LEVER SIDE MOUNT

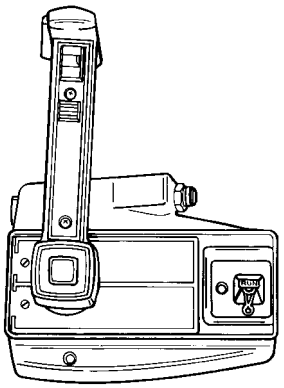

YES
COMMANDER
SIDE MOUNT

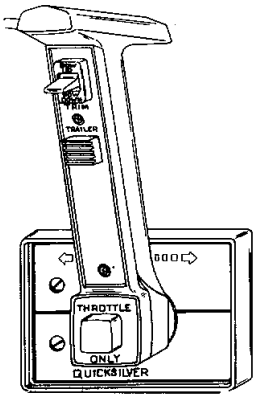

YES
COMMANDER
PANEL MOUNT

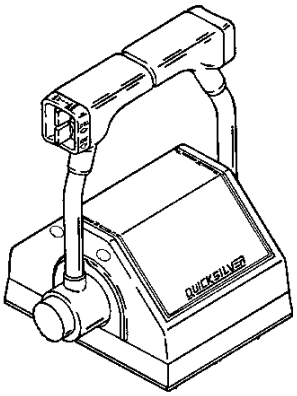

YES
COMMANDER
DUAL ENGINE

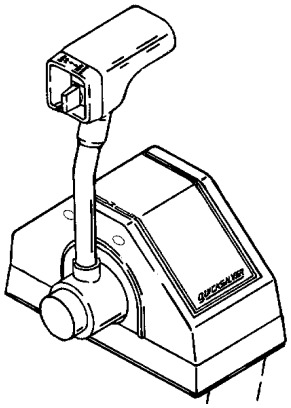

YES
COMMANDER
SINGLE ENGINE

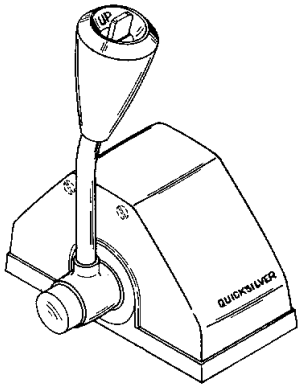

YES
COMMANDER
PANEL MOUNT

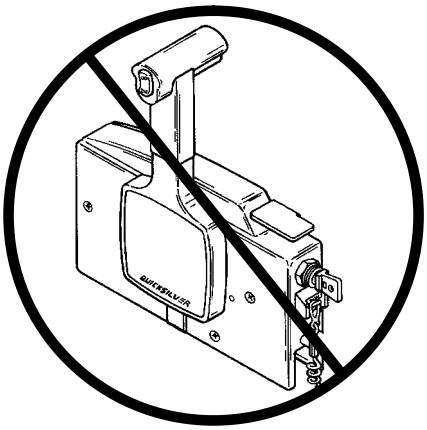

NO
COMMANDER 2000
SIDE MOUNT

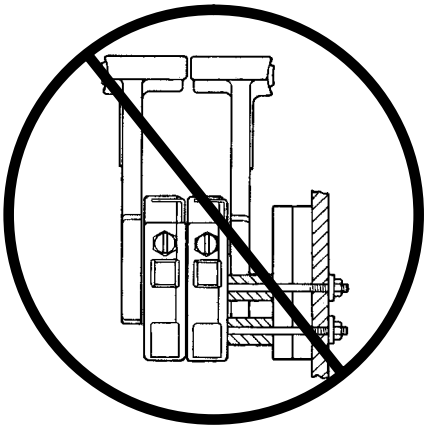

NO
COMMANDER 2000
SIDE MOUNT
STACKED

provided by http://www.crowleymarine.com

Counter Rotation Control Boxes cont.

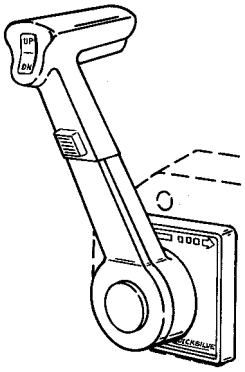

YES
COMMANDER 2000
PANEL MOUNT

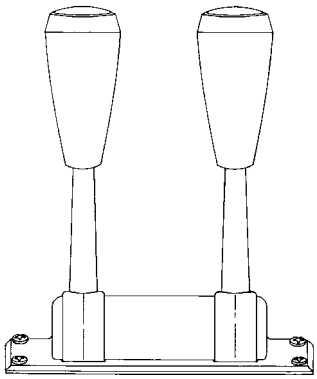

YES
COMMANDER
RECESSED CONSOLE
MOUNT TWO LEVER

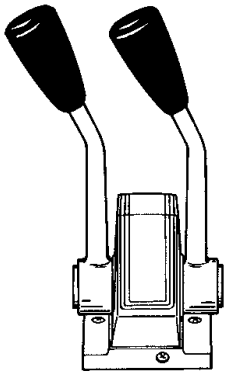

YES
COMMANDER
CONSOLE MOUNT
TWO LEVER

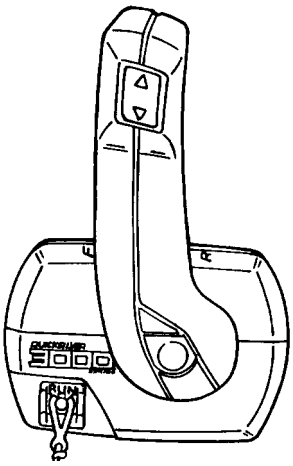

YES
COMMANDER 3000
PANEL MOUNT

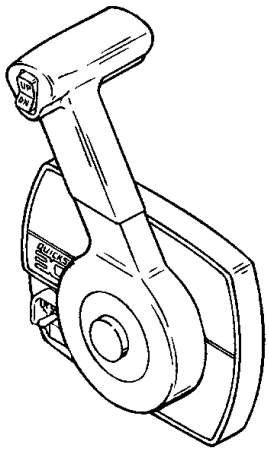

YES
COMMANDER 3000 CLASSIC
PANEL MOUNT

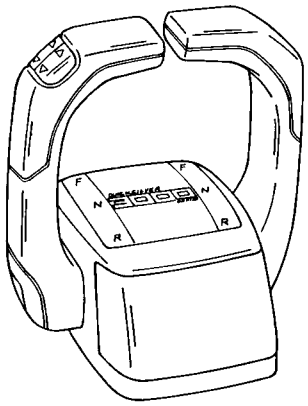

YES
COMMANDER 3000
CONSOLE MOUNT
DUAL ENGINE

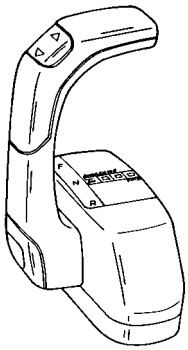

YES
COMMANDER 3000
CONSOLE MOUNT
SINGLE ENGINE

provided by http://www.crowleymarine.com